2012

english version

АЛУМИНКО-БГ

АЛУМИНИЕВИ СИСТЕМИ

www.alumincobg.com

railings catalogue

www.alumincobg.com alumincobg@abv.bg

company profile

ALUMINCO was established in 1982 and marked a new era in the aluminium production. Located in Inofita Industrial Zone – 40 km outside of Athens, it is ideally placed to serve the key markets of Europe as well as the Near and Far East.

From the beginning, the company's dedication was to combine tradition with modern technology. Due to the continuous efforts for perfecting quality and design, the company has been established as the leader in the cast aluminium sector with international recognition.
By using some of the most sophisticated casting equipment available, **ALUMINCO** has gained recognition in both the local and overseas markets.
ALUMINCO has also been awarded the **ISO 9001** as well as the **QUALICOAT** and **BUREAU VERITAS** quality certificates whilst the company's care for the environment has been accredited by the **ISO 14000** .

Today **ALUMINCO** products are distributed in more than **60 countries** all over the world, and its currently involved in big project both in Greece as well as overseas Keeping in mind the demand for quality products and having as a goal to be always ahead of these demands as well as developing a reliable customer service, the company has recently completed a three year investment plan of a new 25.000 sq, m. plant and machinery.

THE PRODUCT
ALUMINCO launched for the first time into the market, a new generation of cast aluminium products incorporating modern architectural requirements with classic design.

- In 1982 begins the production and marketing of a wide range of products such as cast aluminium railings, fences, gates and garden furniture.
- In 1984 the company extends its production with cast aluminum lighting posts, thus covering the needs of hotels, public areas and commercial centers.
- In 1990 for the first time in Greece, **ALUMINCO** introduces the first aluminum panels
- By 2000, five new series of panels are included in the panel range, the **pressed panels**, the **traditional panels**, the **traditional safety doors**, the **security doors**, and the **inox panels**. Each one an achievement of each own.
- In 2003, **ALUMINCO** extends its production in extrusion profiles and introduces a full range of aluminium profile systems, thus strengthening the position of the company in the market.
  Today and in the future **ALUMINCO** will continue to be a pioneer never failing to pursue high quality and service credability.

www.aluminco.gr

АЛУМИНКО-БГ

АЛУМИНИЕВИ СИСТЕМИ

www.alumincobg.com

alumincobg@abv.bg

index

PAGE 2 - 3 Profile Company - Index

PAGE 4 - 5 Certificate - Static and Dynamic Tests

PAGE 6 - 9 Railing System - AVANT GARDE Stairs

PAGE 10- 13 Assembly method of AL-FLEX System

PAGE 14- 19 Railing System - AL-FLEX 55cm

PAGE 20-24 Railing System - AL-FLEX 65cm

PAGE 25-28 Railing System - AL-FLEX 75cm

PAGE 29-35 Railing System - AL-FLEX 85cm

PAGE 36-37 Assembly method of PSATHA System

PAGE 38-66 Railing System of PSATHA

PAGE 67 Fence from Railings system PSATHA

PAGE 68-69 Combination of FENCES

PAGE 70-73 Ways to measure and install Rails & Gates

PAGE 74-75 Columns - Pergola

www.alumincobg.com

static tests

BVLPR 924.037
OBJECTIVE: Tests on Railings according to the French Standard NF P01-013/1985

1. Static horizontal outward test.

Test phase	Deformation in mm				Standard NF P01-013
	Pos.1	Pos.1	Pos.1	Pos.1	
Loading of 3 minutes	3	13	15	a2	
Loading of 15 minutes	4	22	23	3	
Remaining deformation	0,3	0,5	0,6	0,1	<8mm

www.alumineobg.com

2. Static horizontal inquards test. Deformation after 1 min loading=4,6mm.
Remainig deformation -0.
Allowed (NF P01-13) = < 3 mm.

3. Static vertical test.
Remaining deformation = 0
Allowed (NF P01-13) = < 3 mm.

dynamic tests

There was no fall of debris to outside space.

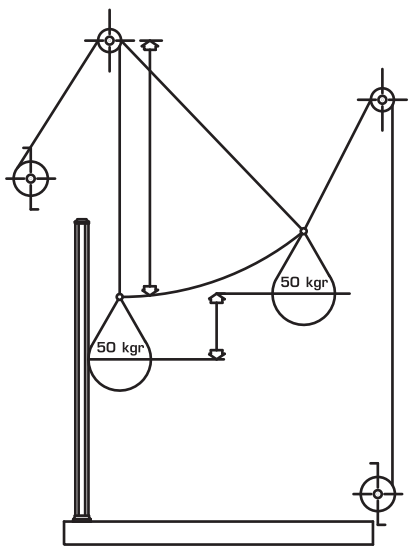

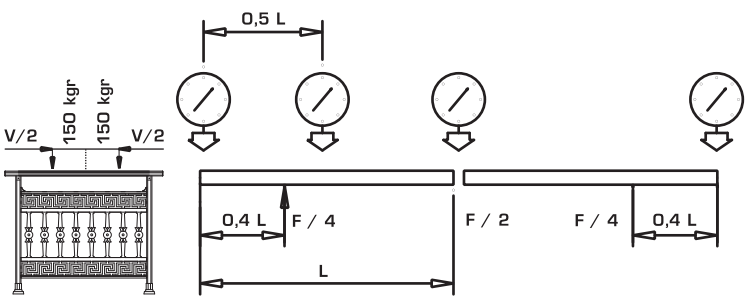

Conclusions

From the above results on rails which were tested it is clear that these products satisfy the French's Standards NF P01-013 in rails for private and public use.

ISTITUTO GIORDANO

RAPPORTO DI PROVA N. 182683

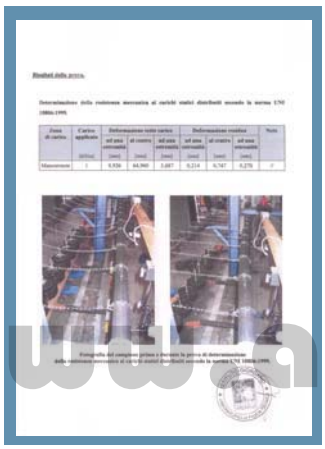

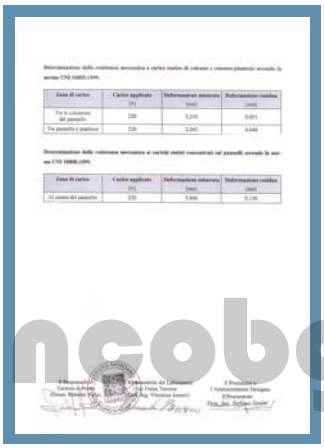

www.aluminco.bg.com

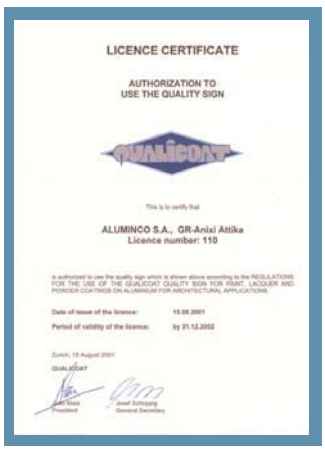
LICENCE CERTIFICATE

AUTHORIZATION TO
USE THE QUALITY SIGN

QUALICOAT

ALUMINCO S.A., GR-Anixi Attika
Licence number: 110

TÜV CERT

CERTIFICATE

The TÜV CERT Certification Body
of RWTÜV Anlagentechnik GmbH

hereby certifies in accordance with TÜV CERT
procedure that

ALUMINCO S.A.
1. St. Athanasios Street
145 65 Anixi - Athens
2. Inofita Plant - Viotia
Hellas

Has established and applies a quality system for

1. Aluminum panels and aluminum traditional doors manufacturing
2. The design and production of cast aluminum products

RWTÜV

ISO 14001 CERTIFICATE OF COMPLIANCE

ALUMINCO S.A.
INDUSTRIAL ZONE OF INOFITA, 330 11
VIOTIA, GREECE

ISO 14001:1996

MANUFACTURING OF DOOR PANELS, TRADITIONAL DOORS,
CASTED DOOR GUARDRAILS AND ALUMINIUM PARTS.

Railings assays have been made under Florida conditions,which are meant to be the hardest weather conditions of wind, strong rain, humidity and radiation towards the sun.

railing assembly
just
with one key

avant garde

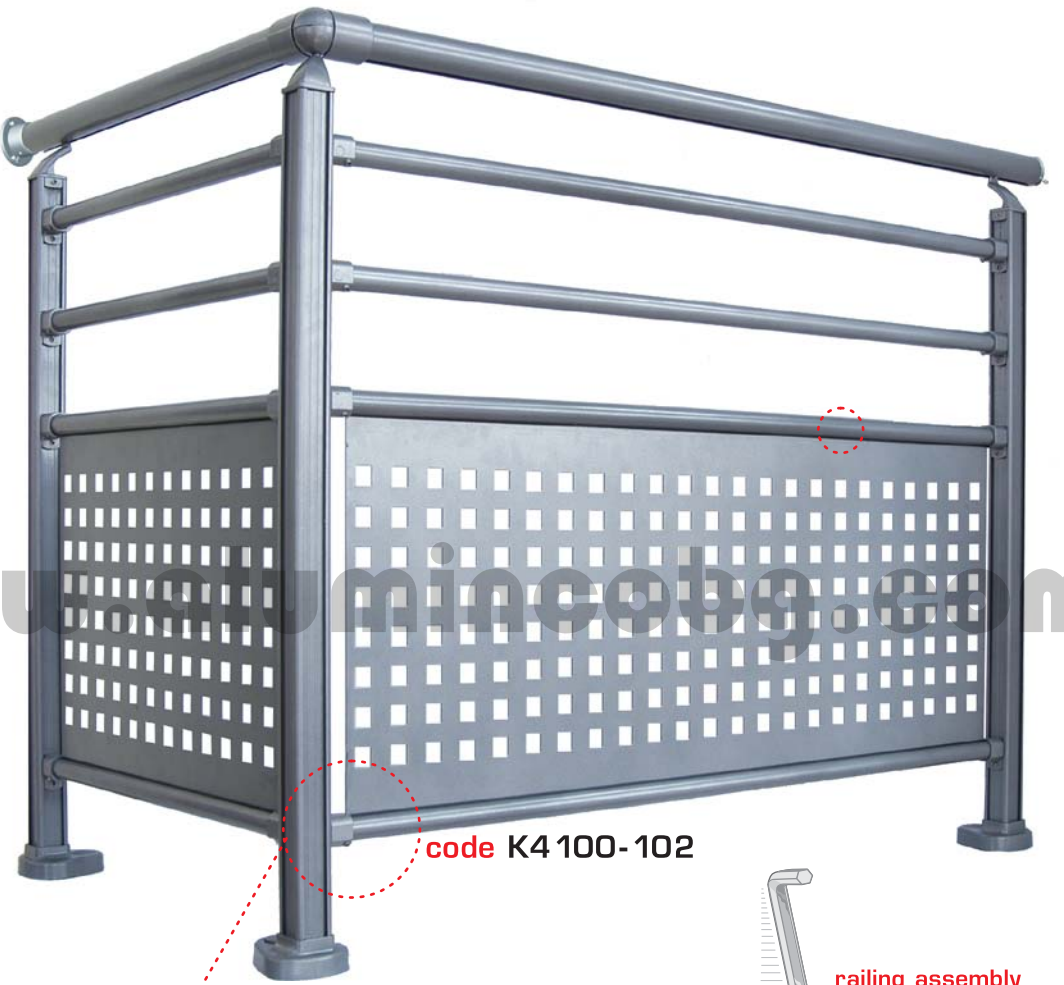

code K4100-102

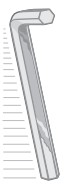

railing assembly
just
with one key

code 4202
column attachment
for guide Φ26

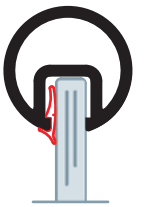

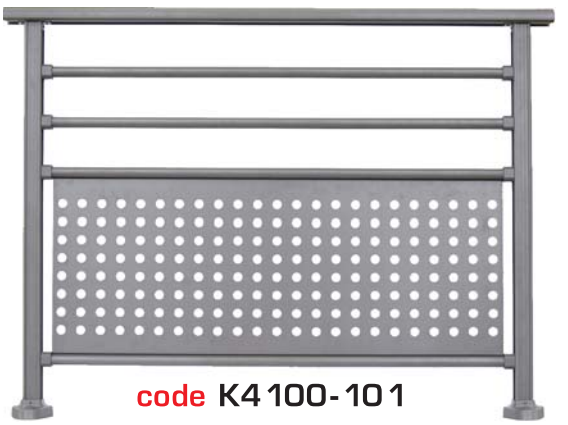

code K4100-101

code K4100-301

www.aluminee.bg.com

railing assembly
just
with one key

accessories

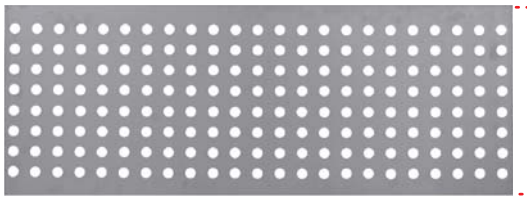

code L4501

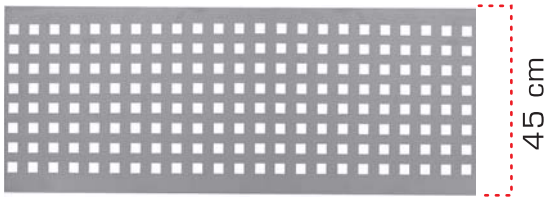

code L4502

www.aluminco-bg.com

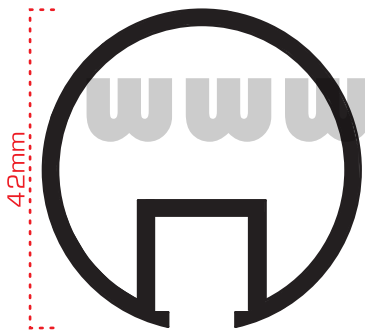

code 920
Φ42 railtop

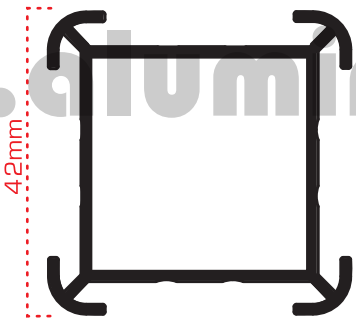

code 915
column

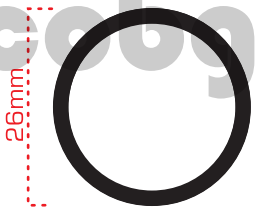

code 6-001
Φ26-horizontal profile.

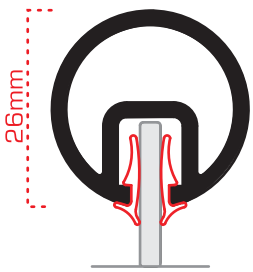

code 904
for aluminium or inox sheet and composite panel 2 mm - 3 mm

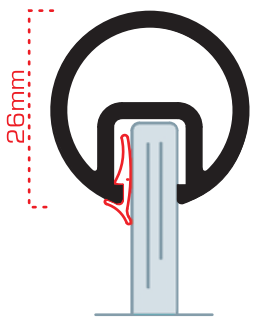

code 905
Φ26-for triplex glass 6 mm.

code 410-420
joint

avant garde stairs

code 4203
column to railtop
accessory

code 4406
staircase finish

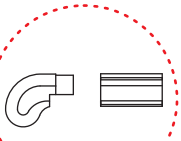

code 15
railtop

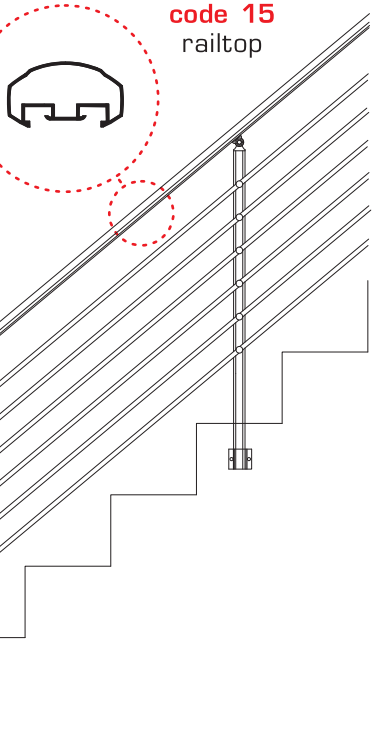

code 4152 εξωτερικά πέλματα για κολώνα 9 15
external feet
for column 9 15

70mm

code 4151

35mm

code 4150

35mm

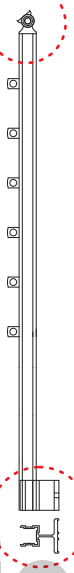

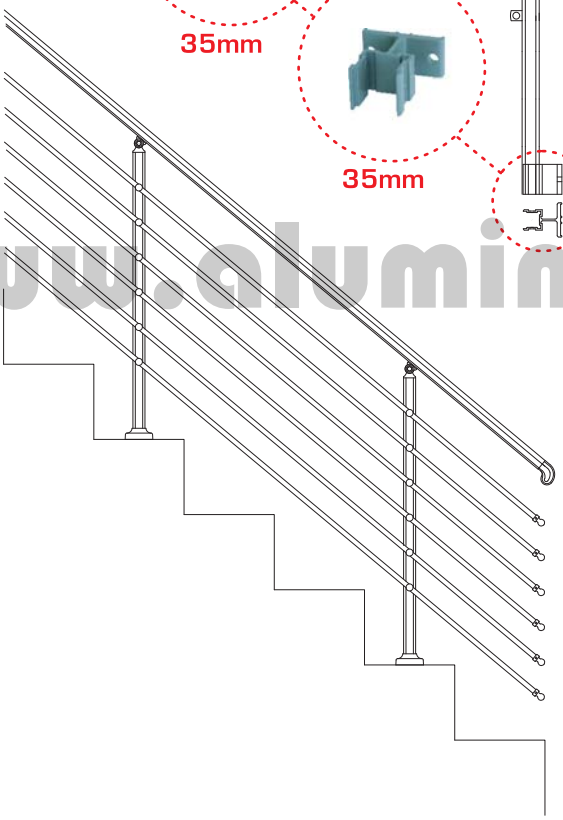

www.aluminco-bg.com

code 920
Φ42 railtop

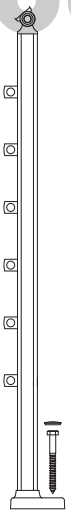

code 4302
adjustable corner
for column
attachment Φ 16

code 4404
end-cover for railtop
920

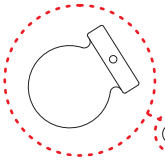

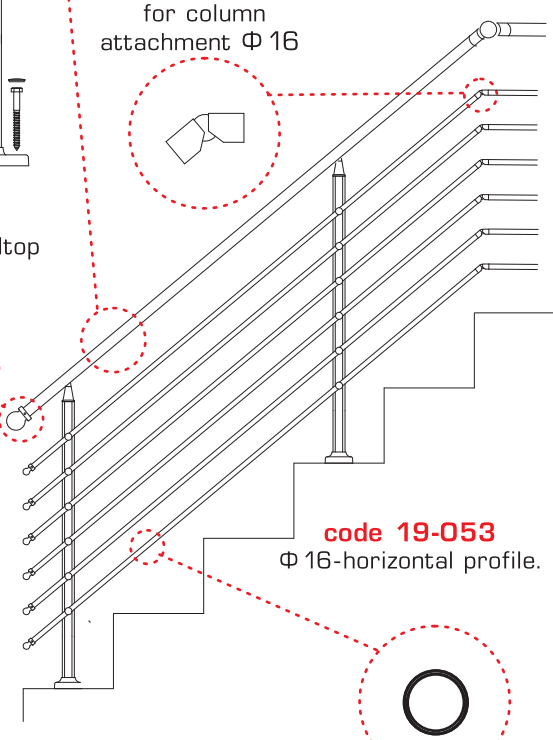

code 19-053
Φ 16-horizontal profile.

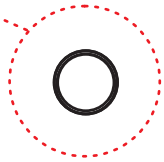

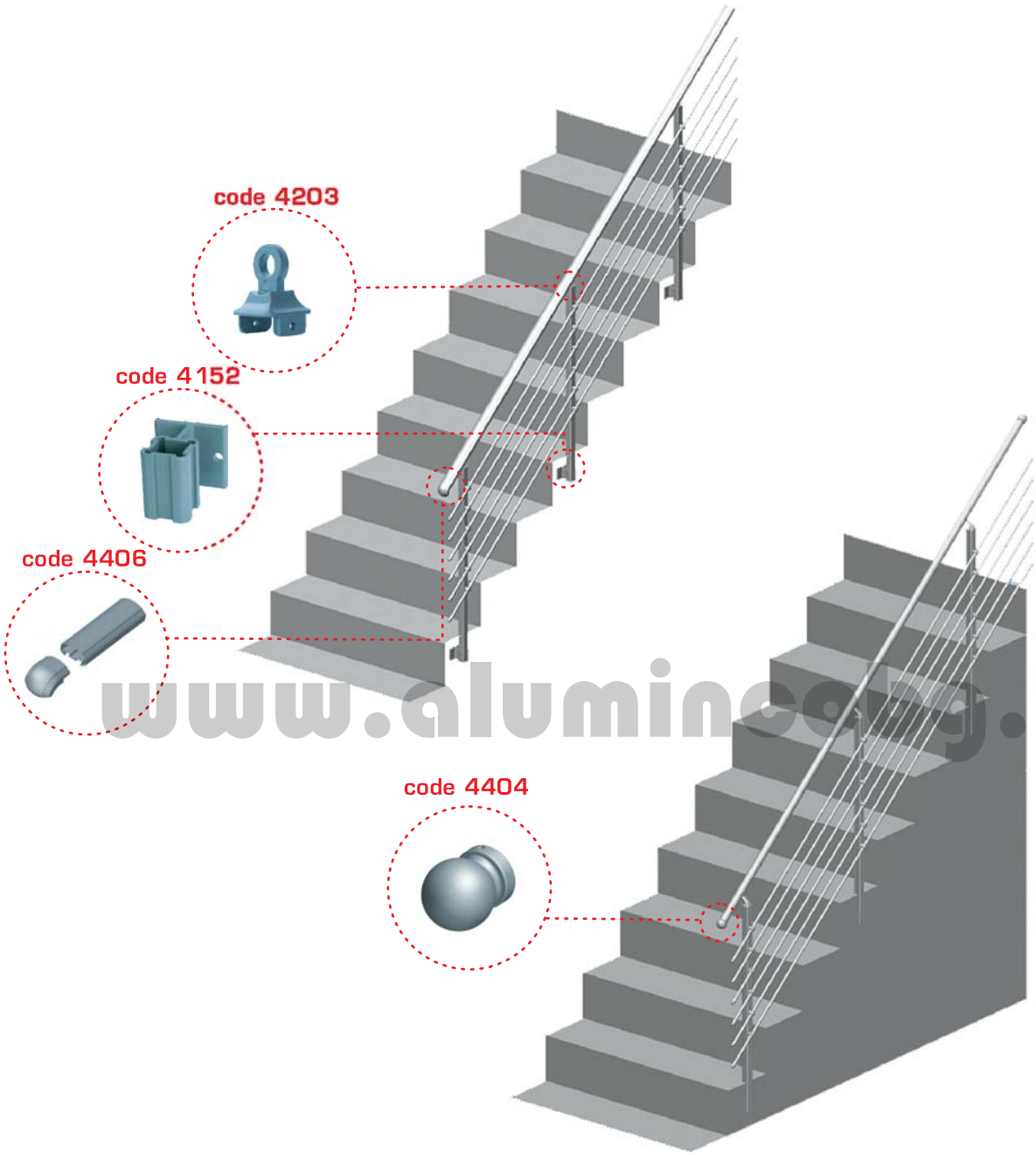

www.aluminco.bg.com

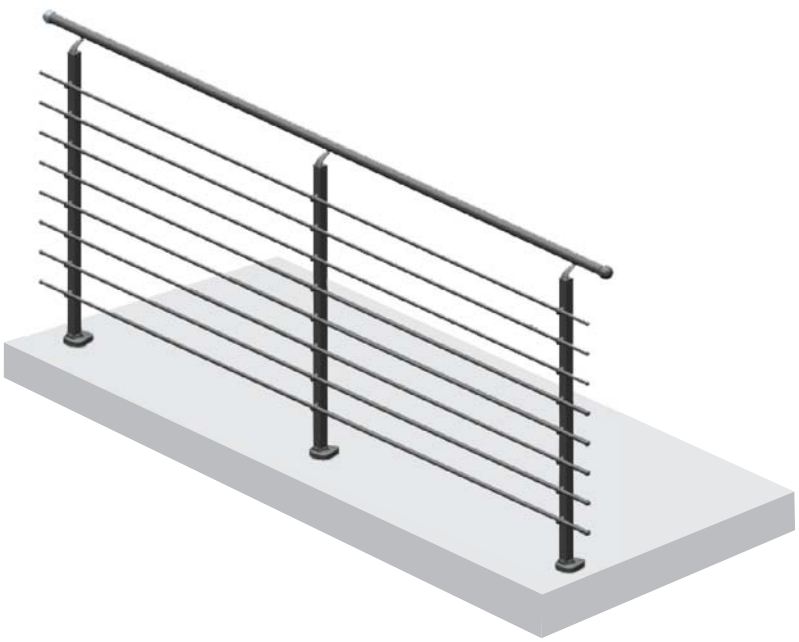

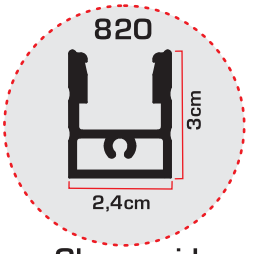

Glass guide

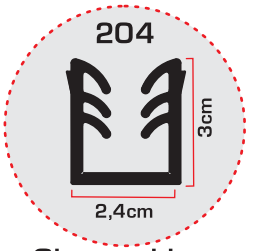

Glass rubber

TRIPLEX glass pf **6mm**

www.aluminco.com

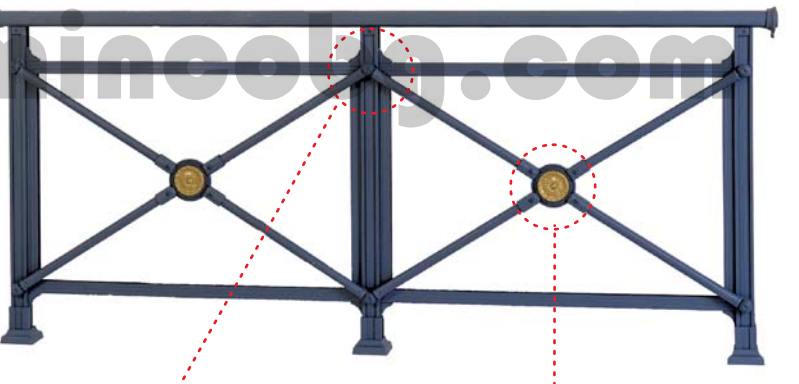

CONNECTING ADJUSTABLE CORNER
FOR CODE No 207 & 159

code 155

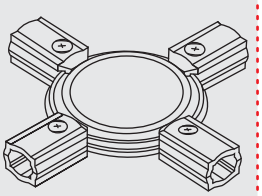

code 171

ROSSETE

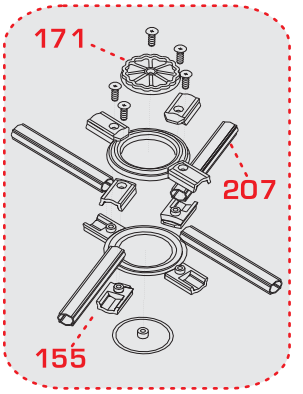

22 AL-FLEX CONNECTION

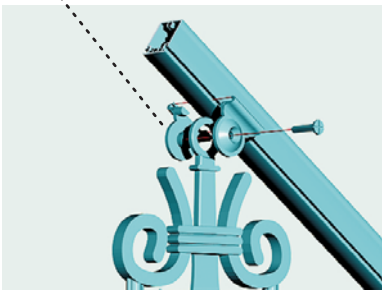

23 AL-FLEX GUIDE

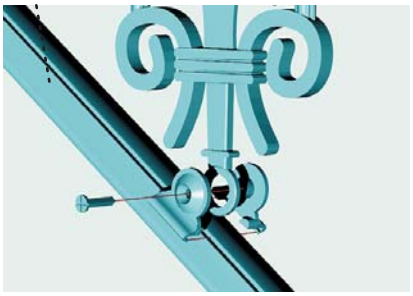

AL-FLEX is an aluminium module with moveable heads on both ends, supported exclusively by the ALUMINCO SYSTEM.

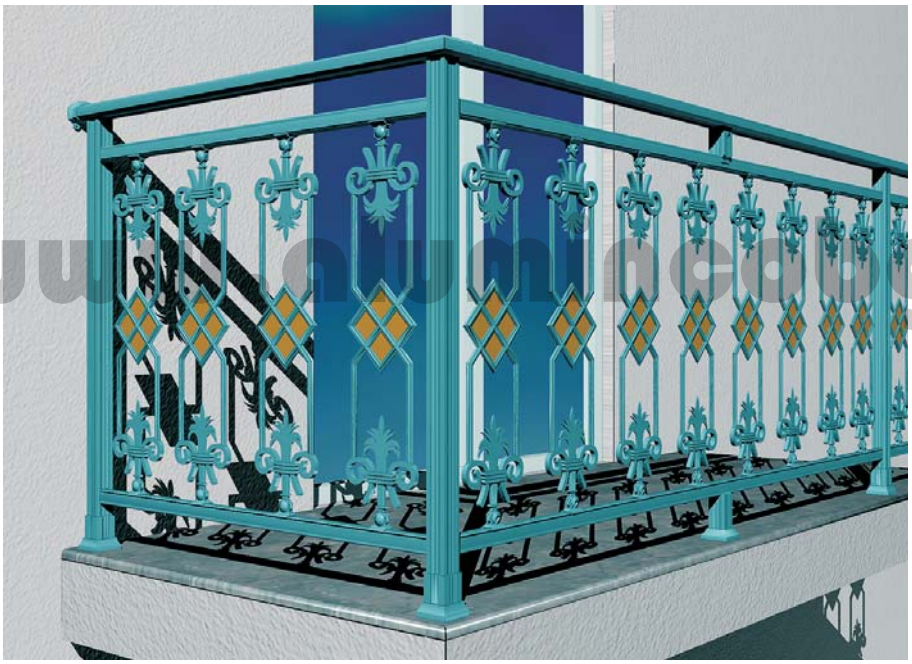

www.aluminco.bg.com

Due to the AL-FLEX HEAD, the modules can be fixed on any surface e.g. Wood, wrought iron, or any aluminium profile.

24

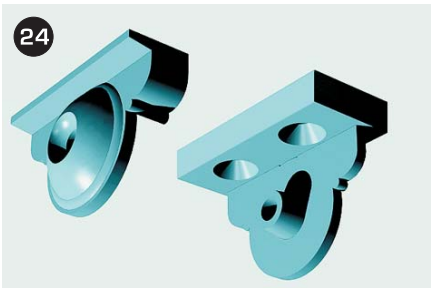

24 AL-FLEX HEAD

NOTE !!!

The accessories and the profiles are the same as in internal and external psatha.

al-flex system

assembly method of al-flex & accessories

al-flex system

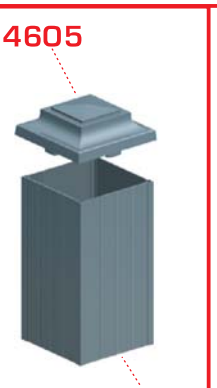

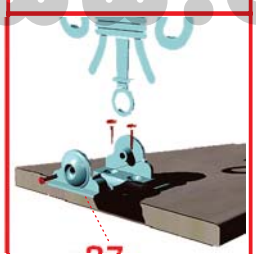

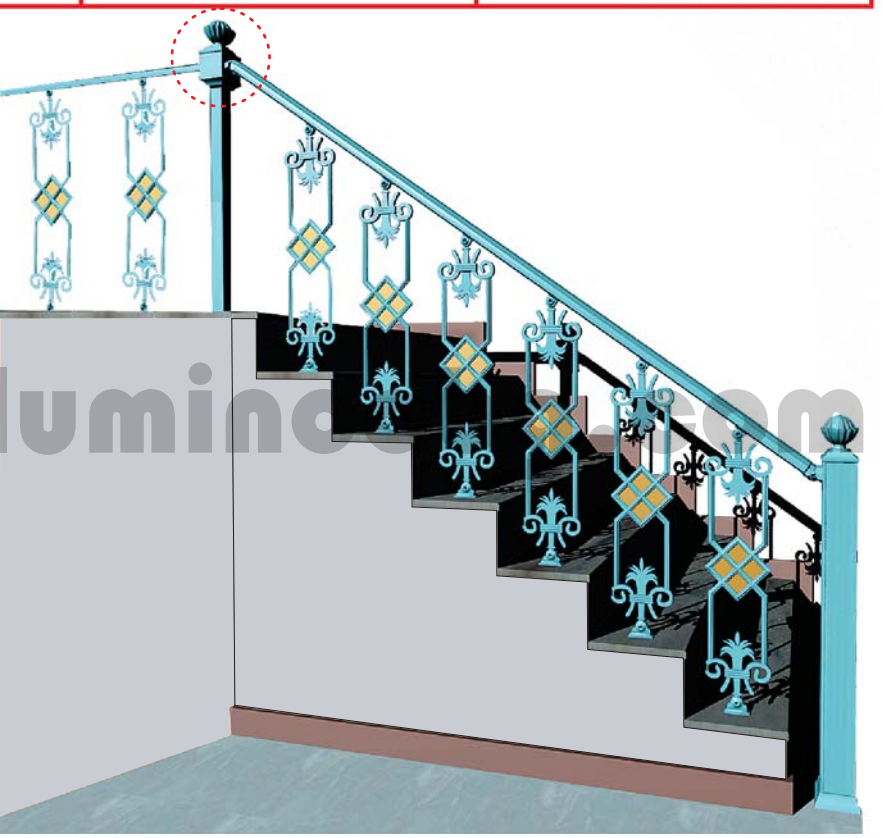

www.aluminet.com

code 15
railtop

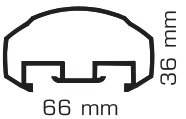

code 23
al-flex guide

code 25
column
80X80mm

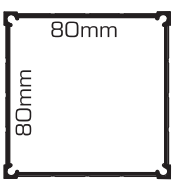

code 4602
thirsus

code 4603
thirsus

code 22
al-flex
connection
to railtop

code 4203
column to
railtop
accessory

code 4308
flexible
railtop
accessory

code 4102
supporting
base for
column 25

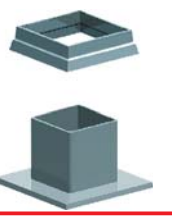

code 4306
horizontal
& vertical
connection
(col-guide)

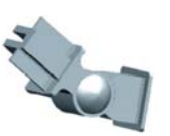

code 4606
thirsus with
column cover

assembly method of al-flex & accessories

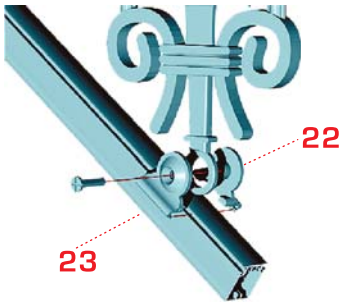

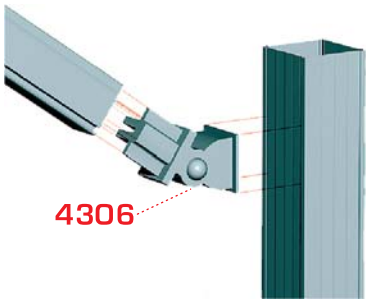

www.alminco.bg.com

code 4601
cube

code 4303
adjustable corner connection

code 4406
staircase finish

code 4153
wall railtop support

supporting method with accessory 4 153

code 4304
horizontal corner guide connection

code 4305
vertical corner guide connection

code 4309
flexible railtop-col. accessory

code 4605
cover for column 25

code 4154
external support accessory

code 37
ground fixation

code 4307
horizontal corner connection (col-guide)

al-flex system

al-flex 55

- RHOMBUS -

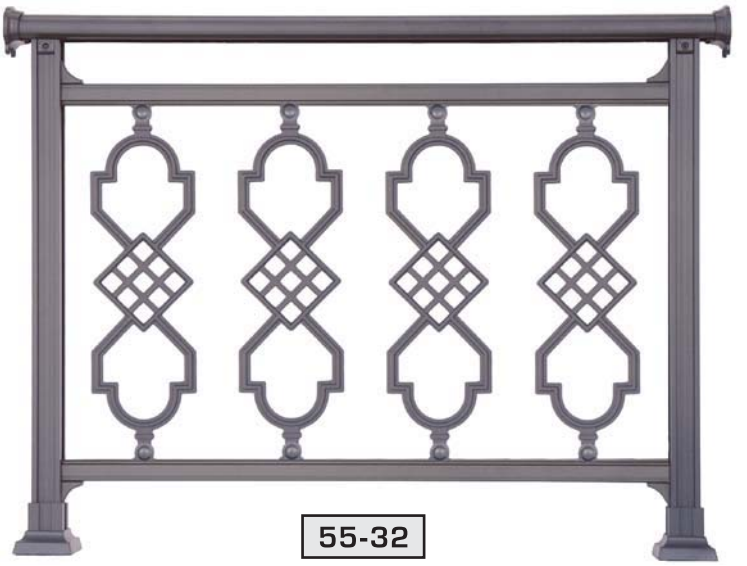

55-32

All AL FLEX models with the same height are combining together according to customer wants.
All AL FLEX series 55 models, are 55 cm height. Appropriate railing dimensions.
minimum height 67 cm
maximum height 85 cm

- KORONA -

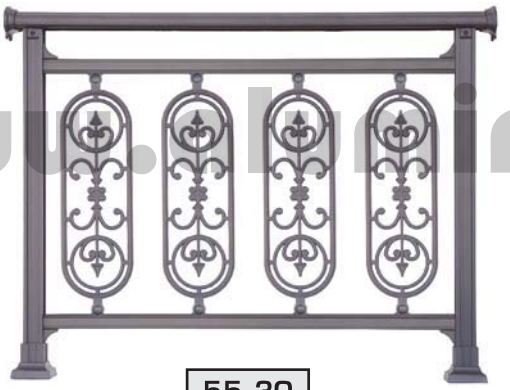

55-30

- MAKRIYIANNI -

55-31

www.aluminco.com

al-flex modules

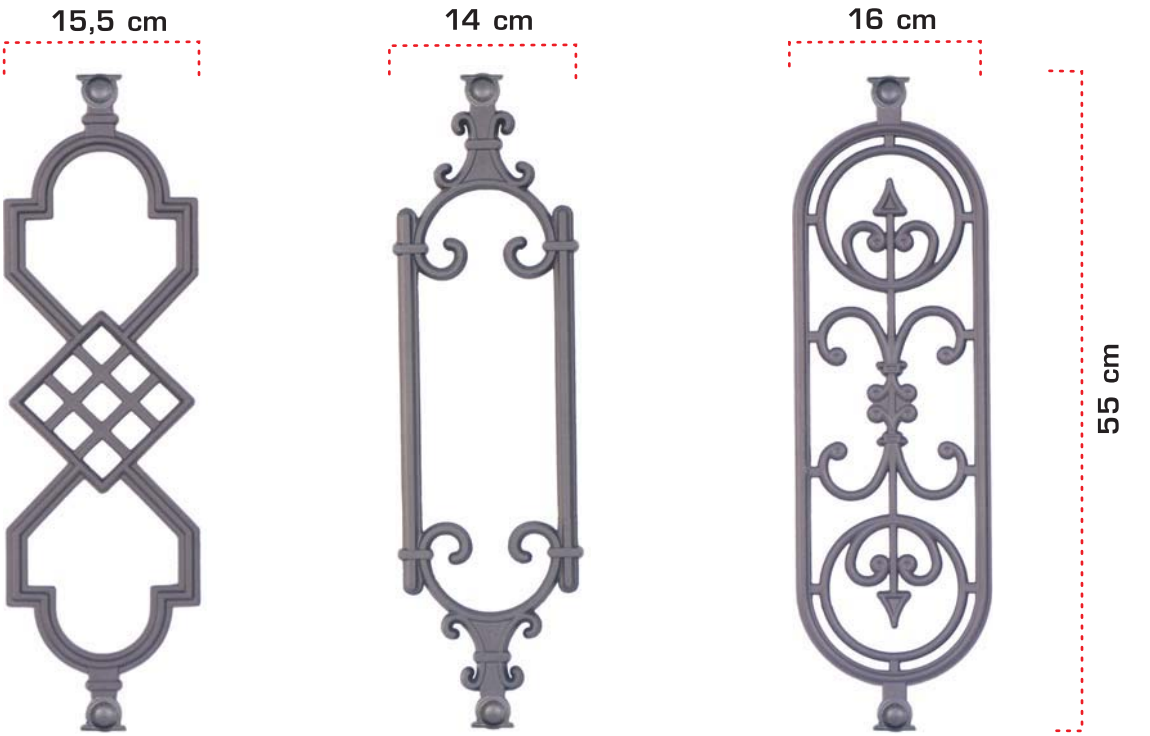

55-32	4 PCS/M

55-31	4 PCS/M

55-30	4 PCS/M

- ROMAN -

55-33

- MEANDROS -

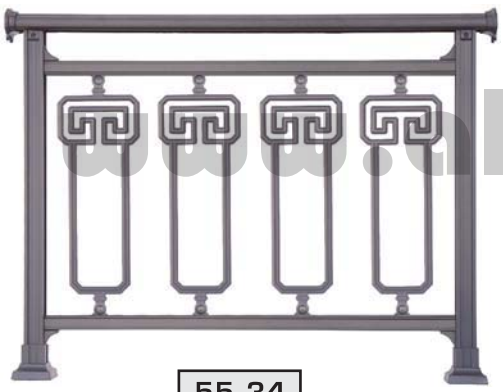

55-34

- LINEAR -

55-35

www.aluminco.bg.com

al-flex modules

16 cm

55-33 | 4 PCS/M

18 cm

55-34 | 4 PCS/M

2,2 cm

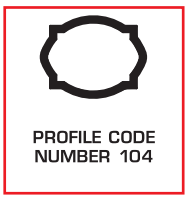

PROFILE CODE NUMBER 104

55 cm

55-35 | 4 PCS/M

al-flex 55

- BYZANTINE -

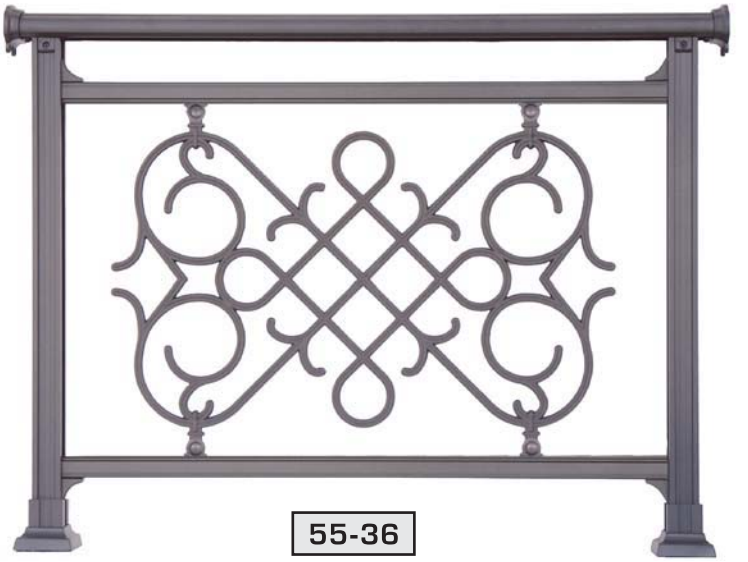

55-36

- KERAMIKOS -

55-37

- KAMARA -

55-38

www.alumincoeg.com

al-flex modules

75 cm

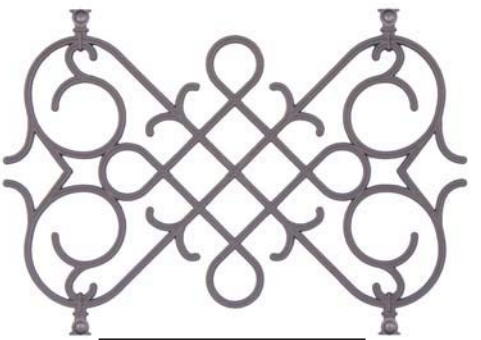

55-36	1 PCS/M

97 cm

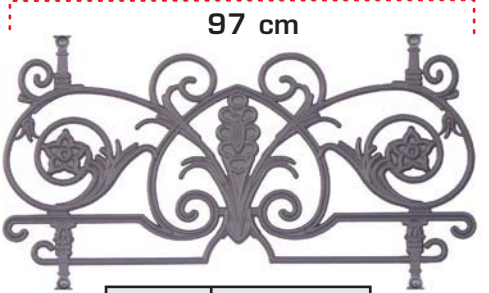

55-37	1 PCS/M

16,5 cm

55-38	4 PCS/M

- ROCKA -

55-39

- KOLONATO -

55-40

- KRINOS -

55-41

www.aluminco.bg.com

al-flex modules

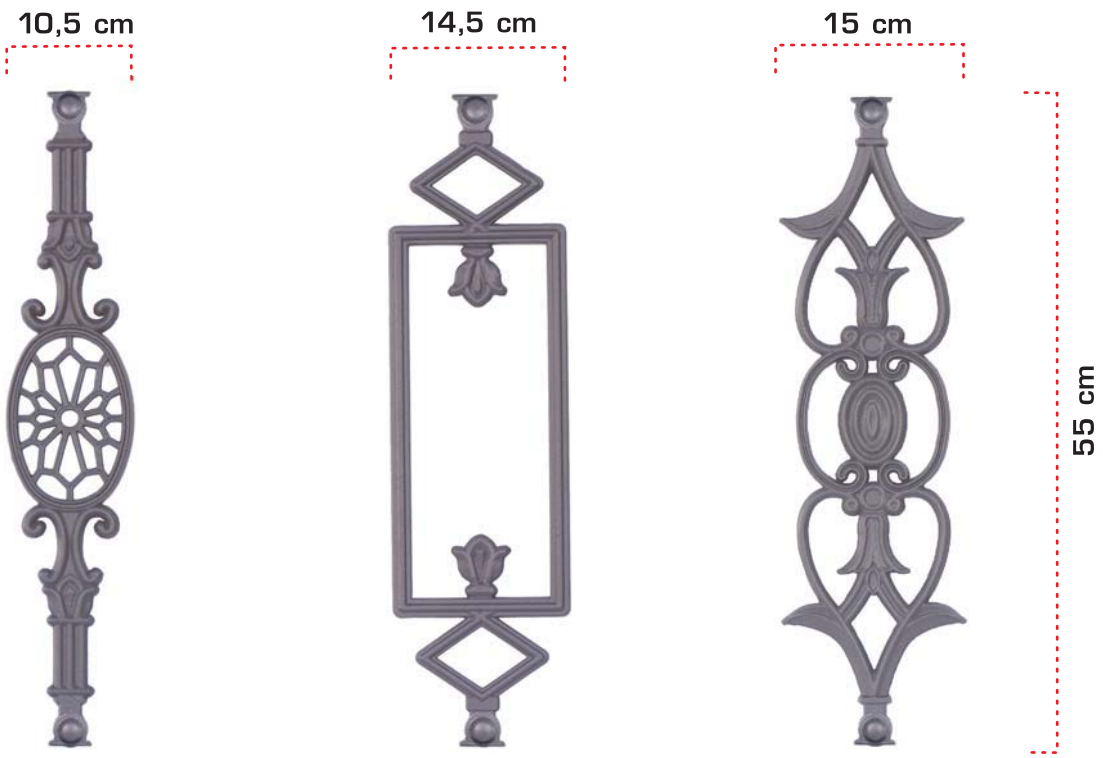

55-39	4 PCS/M

55-40	4 PCS/M

55-41	4 PCS/M

al-flex 55

- ETHNIKIS -

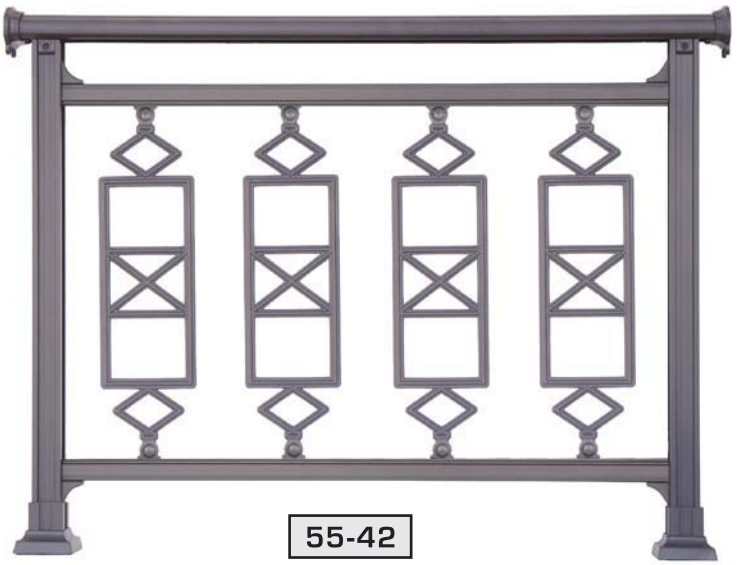

55-42

- ERODIUS -

55-43

- MARGARITA CLASSIC -

55-44

www.aluminco.com

al-flex modules

14,5 cm

55 cm

55-42 | 4 PCS/M

80 cm

55 cm

55-43 | 1 PCS/M

63 cm

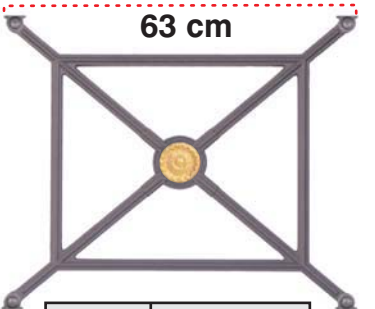

55 cm

55-44 | 1 PCS/M

- CROWN -

55-46

- ASTERI -

55-47

- DRAGON -

55-45

www.aluminco.com

al-flex modules

95 cm

55 cm

55-45 | 1 PCS/M

63 cm

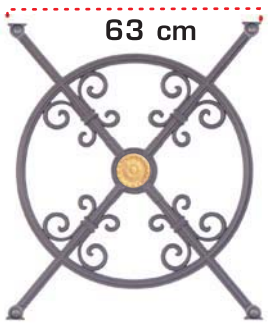

55 cm

55-46 | 1 PCS/M

7 cm

55 cm

55-47 | 1 PCS/M

al-flex 65

- ASTERI -

65-30

All AL FLEX models with the same height are combining together according to customer wants.
All AL FLEX series 65 models, are 55 cm height. Appropriate railing dimensions.
minimum height 77 cm
maximum height 95 cm

- APERITO -

65-31

- KARAVOLO DIPLO -

65-32

www.aluminco.com

al-flex modules

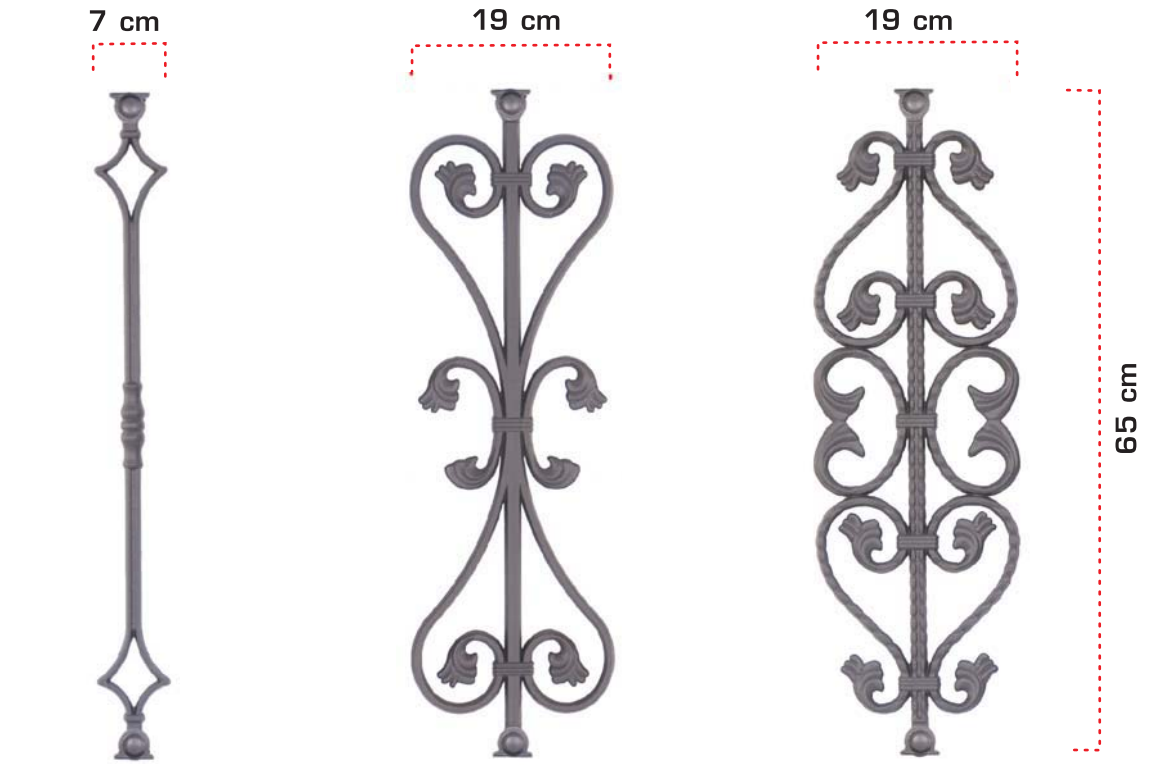

65-30	7 PCS/M

65-31	4 PCS/M

65-32	4 PCS/M

- LINEAR -

65-33

- SAITA -

65-34

- VENITIAN -

65-35

www.alumincobg.com

al-flex modules

2,2 cm

PROFILE CODE NUMBER 104

65-33 | 9 PCS/M

15,5 cm

65-34 | 4 PCS/M

5 cm

11,5 cm

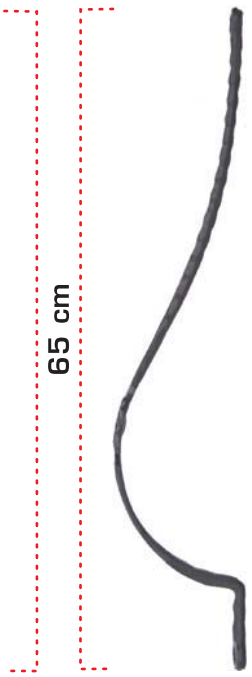

65-35 | 6 PCS/M

al-flex 65

- MARGARITA CLASSIC -

65-36

- CROWN -

65-37

- DOLPHIN -

65-38

www.aluminco.bg.com

al-flex modules

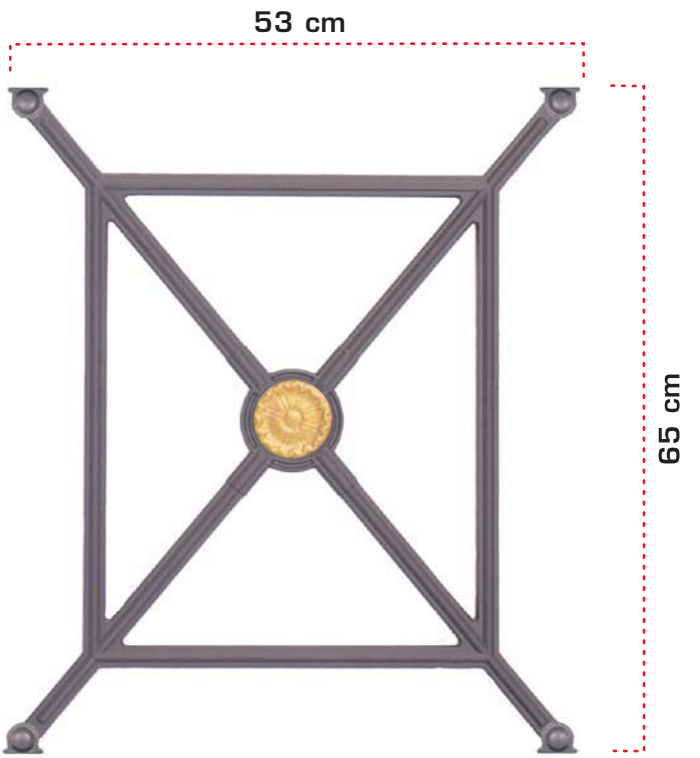

65-36	1 PCS/M

65-38	5 PCS/M

- PHYLARAKI -

65-39

- AKANTHOS -

65-41

- EROTAS -

65-42

www.aluminco.com

al-flex modules

19,5 cm

65-39 | 4 PCS/M

32 cm

65 cm

65-41 | 3 PCS/M

106,5 cm

65 cm

65-42 | 1 PCS/M

53 cm

65 cm

65-37 | 1 PCS/M

al-flex 65

- LINEAR -

CODE	DIMENSIONS
55-50	55cm
65-45	65cm
75-41	75cm
85-50	85cm

PROFILE CODE NUMBER 828

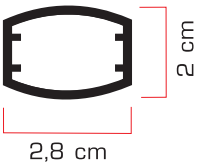

- PIGASOS -

65-44

- KYKNOS -

65-43

www.aluminco.com

al-flex modules

62 cm

65-43 | 1 PCS/M

56 cm

65 cm

65-44 | 1 PCS/M

- MESEONIKO -

75-30

- VIENNA -

75-31

- ROMAN -

75-32

www.alumincobg.com

al-flex modules

17 cm

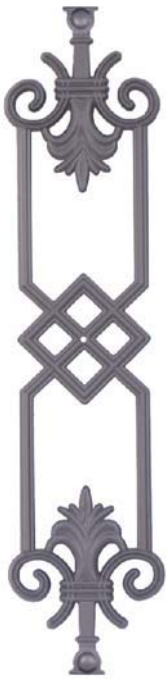

75-30 | 4 PCS/M

20 cm

75-31 | 4 PCS/M

16 cm

75 cm

75-32 | 4 PCS/M

al-flex 75

- MEANDROS -

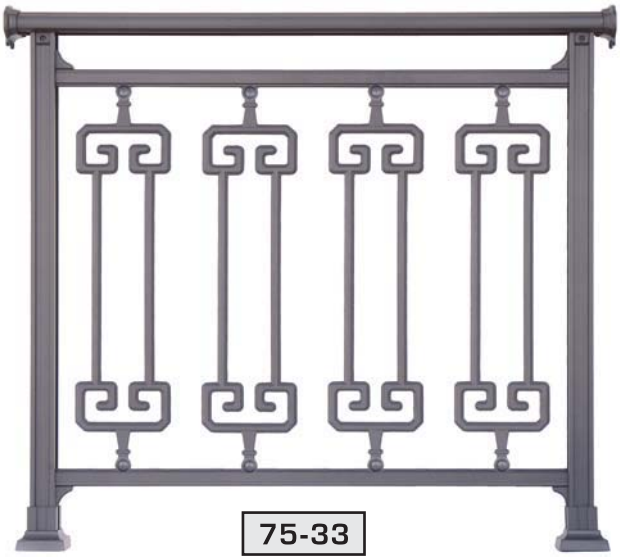

75-33

All AL FLEX models with the same height are combining together according to customer wants.
All AL FLEX series 75 models, are 55 cm height. Appropriate railing dimensions.
minimum height 87 cm
maximum height 105 cm

- LINEAR -

75-34

- BRONZE CLASSIC -

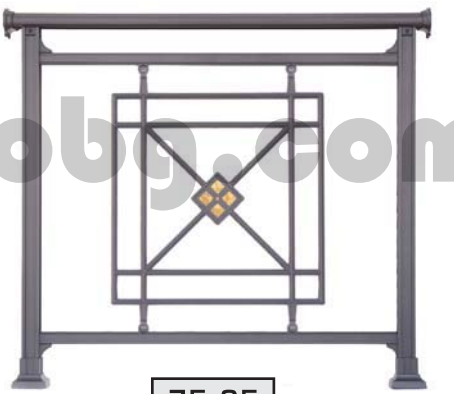

75-35

www.aluminco.com

al-flex modules

18 cm

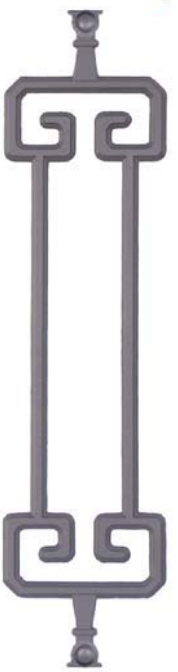

PROFILE CODE NUMBER 104

2,2 cm

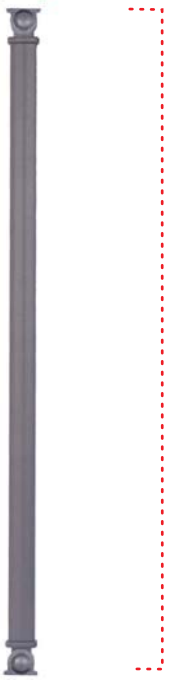

75 cm

57,5 cm

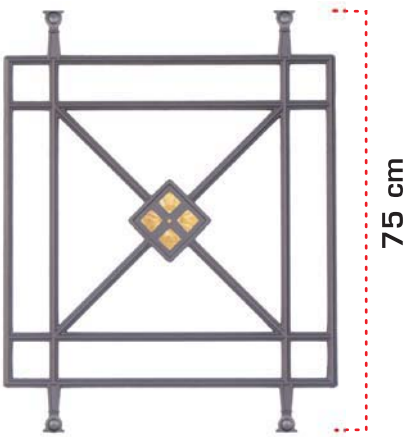

75 cm

75-33	4 PCS/M

75-34	9 PCS/M

75-35	1 PCS/M

- PERGOLA -

75-36

- HARP -

75-37

- BOUQUET -

75-38

www.aluminco.bg.com

al-flex modules

57,5 cm

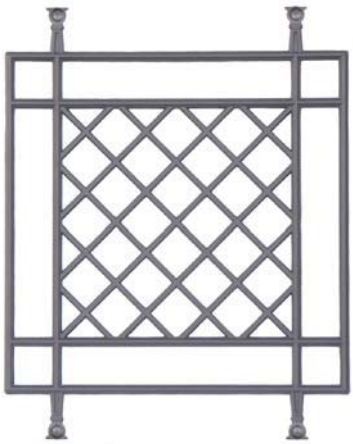

56 cm

50 cm

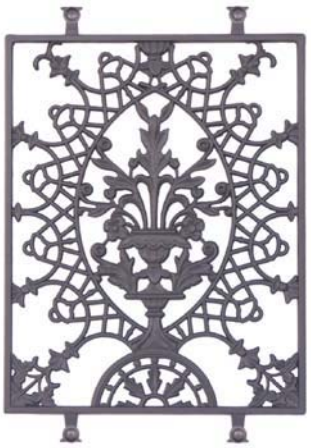

75 cm

75-36	1 PCS/M

75-37	1 PCS/M

75-38	1 PCS/M

al-flex 75

- STRIFTO -

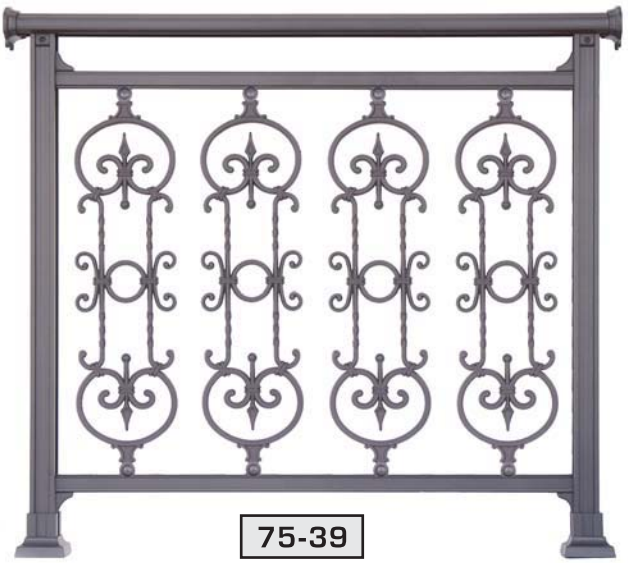

75-39

- TULIP -

75-40

- ASTERI -

75-42

www.aluminco.com

al-flex modules

19 cm

75-39 | 4 PCS/M

17 cm

75-40 | 4 PCS/M

7 cm

75 cm

75-42 | 9 PCS/M

- AYIOKILIMA -

85-30

- LOUVRE -

85-31

- HERAKI -

85-32

www.aluminecobg.com

al-flex modules

25 cm

85-30 | 3 PCS/M

25 cm

85-31 | 3 PCS/M

18 cm

85 cm

85-32 | 4 PCS/M

al-flex 85

- AKROKERAMO -

85-33

All AL FLEX models with the same height are combining together according to customer wants.
All AL FLEX series 85 models, are 55 cm height. Appropriate railing dimensions.
minimum height 97 cm
maximum height 115 cm

- KAMARA -

85-34

- KOLONATO -

85-35

www.aluminco.com

al-flex modules

23,5 cm

85-33 | 3 PCS/M

17 cm

85-34 | 4 PCS/M

14,5 cm

85 cm

85-35 | 4 TEM/M

- ROCKA -

85-36

- KRINOS -

85-37

- LINEAR -

85-38

www.aluminco-bg.com

al-flex modules

10,5 cm

85-36 | 6 PCS/M

19,5 cm

85-37 | 4 PCS/M

2,2 cm

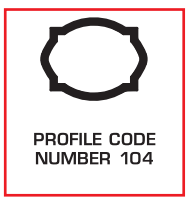

PROFILE CODE NUMBER 104

85 cm

85-38 | 9 PCS/M

al-flex 85

- KORONA -

85-39

- ETHNIKIS -

85-40

- MAKRIYIANNI -

85-41

www.aluminco-bg.com

al-flex modules

16 cm

85-39 | 4 PCS/M

14,5 cm

85-40 | 4 PCS/M

14,5 cm

85-41 | 4 PCS/M

85 cm

- SAITA -

85-42

- ARROW -

85-43

- ASTERI A -

85-44

- ASTERI B -

85-45

www.aluminco.bg.com

al-flex modules

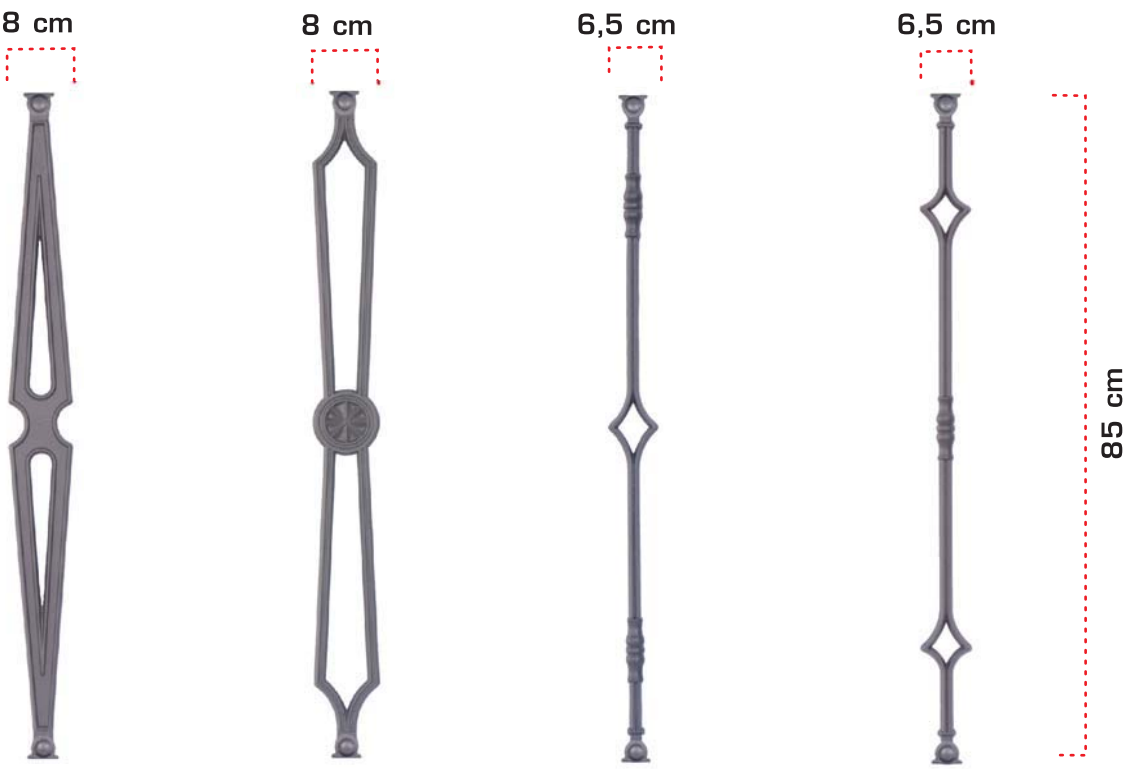

85-42	6 PCS/M	85-43	6 PCS/M	85-44	7 PCS/M	85-45	7 PCS/M

al-flex 85

- MINOAN A -

85-46

- MINOAN B -

85-47

- SUN -

85-48

- DILOS -

85-49

www.aluminco-bg.com

al-flex modules

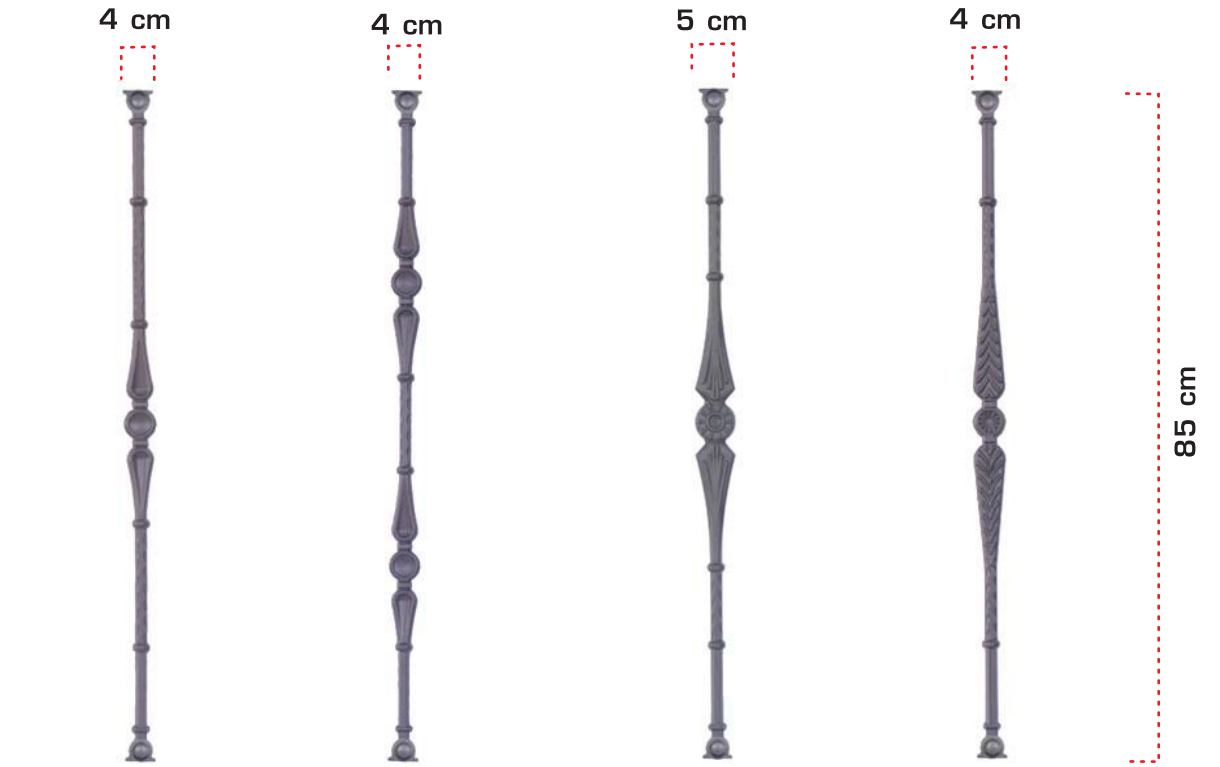

85-46	7 PCS/M	85-47	7 PCS/M	85-48	7 PCS/M	85-49	7 PCS/M

- FESTOS -

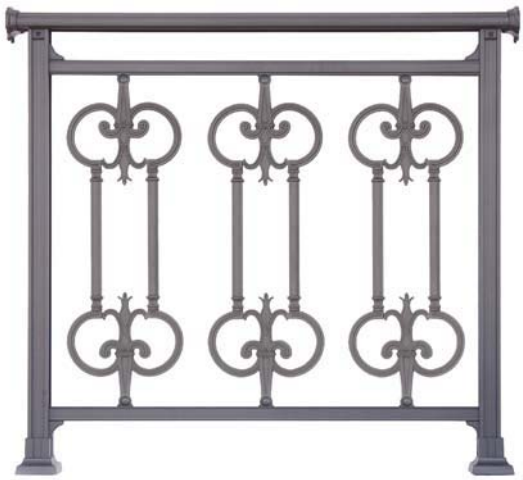

85-52

- KNOSSOS -

85-51

www.alumincobg.com

al-flex modules

24,5 cm

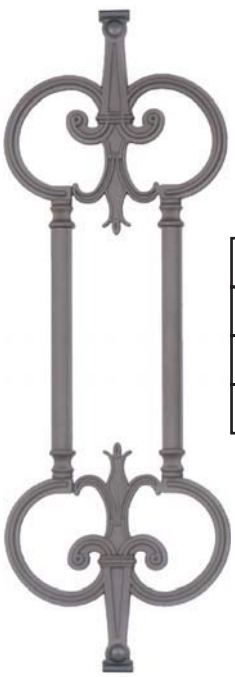

85-52 | 3 PCS/M

- FESTOS -

CODE	DIMENSIONS
65-47	65cm
75-44	75cm
85-52	85cm

23 cm

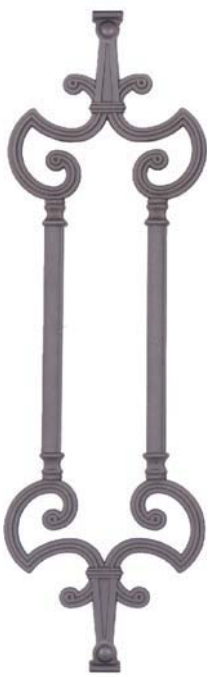

85-51 | 3 PCS/M

- KNOSSOS -

CODE	DIMENSIONS
65-46	65cm
75-43	75cm
85-51	85cm

85 cm

assembly method of psatha & accessories

internal psatha

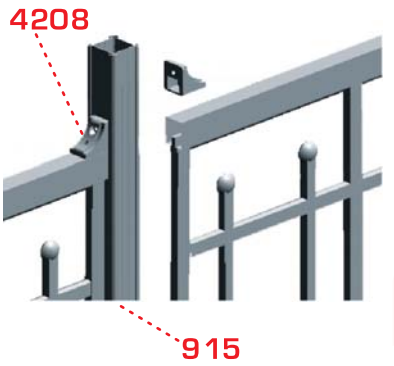

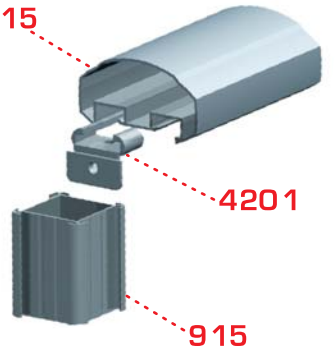

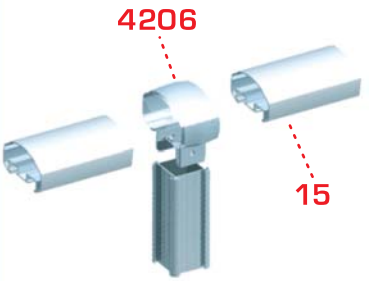

www.aluminco.bg.com

code 4201
connection for railtop-column

code 4211
connection for railtop-column

code 4208
column connection for internal psatha

code 15
railtop

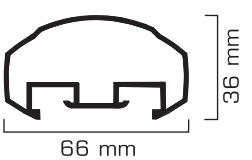

code 915
column

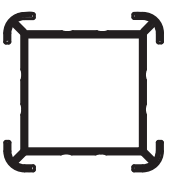

code 4405
railtop cover

code 4204
intermediate column connection with guide

assembly method of psatha & accessories

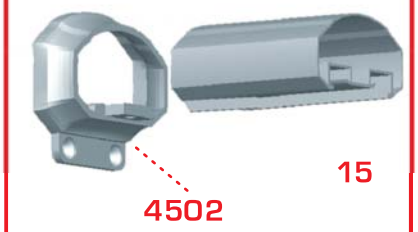

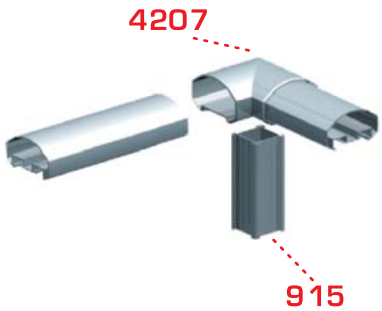

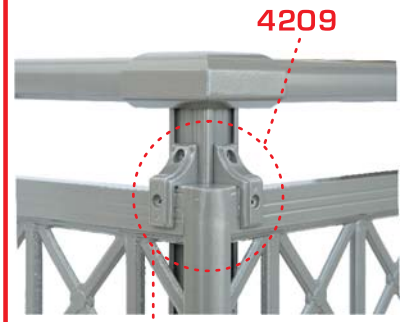

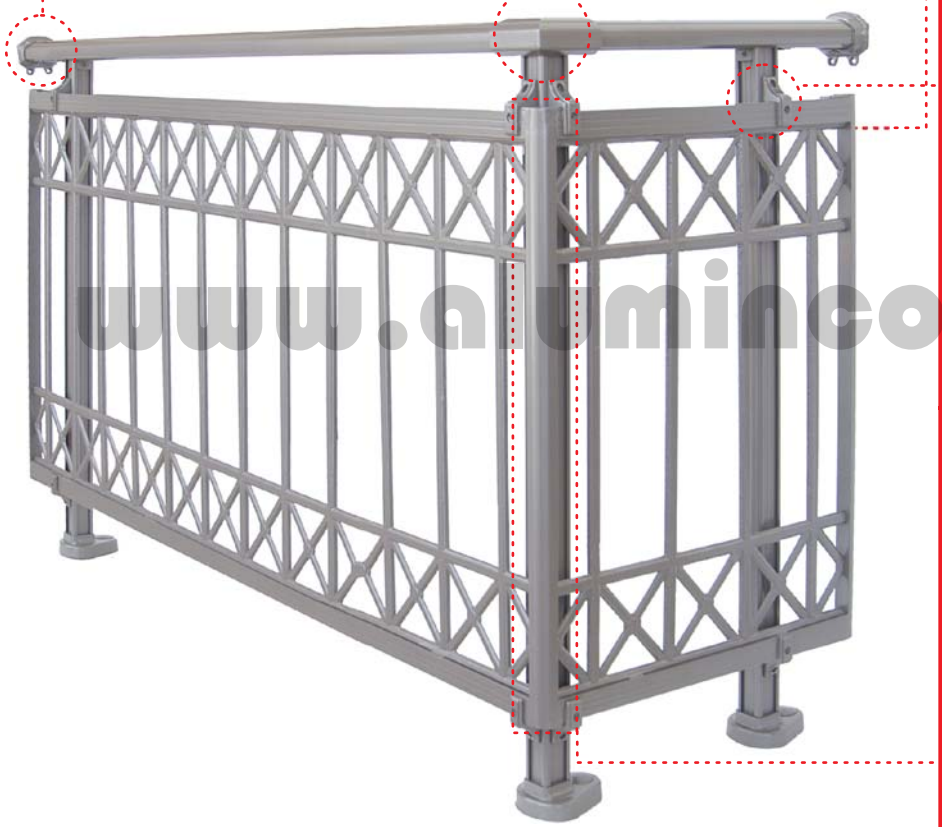

code 4209
column connection for external psatha

corner column for psatha

code 4303
adjustable corner connection

code 4412
corner column for external psatha

code 875
profile for join corner

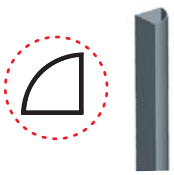

code 30
railtop

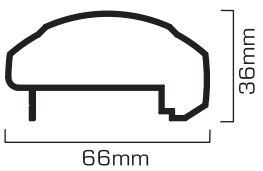

code 4207
corner accessory for railtop 15 & 30

code 4206
connecting accessory for railtop 15 & 30

code 4502
railtop to wall attachment 15 & 30

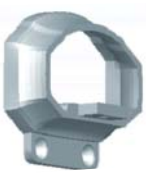

connection of railtop 30 with column 915 with screw 4,2X50

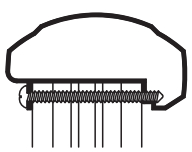

www.alumincobg.com

external psatha

serifos

Rail height
30 - 110 cm

psatha modules

18 cm	18-08	5 pcs x 96 cm = 480 cm
35 cm	35-13	5 pcs x 96 cm = 480 cm
55 cm	55-13	5 pcs x 96 cm = 480 cm
70 cm	70-35	5 pcs x 96 cm = 480 cm
80 cm	80-13	5 pcs x 96 cm = 480 cm

www.aluminobg.com

aluminco psatha railing system

Rail height
30 - 110 cm

psatha modules

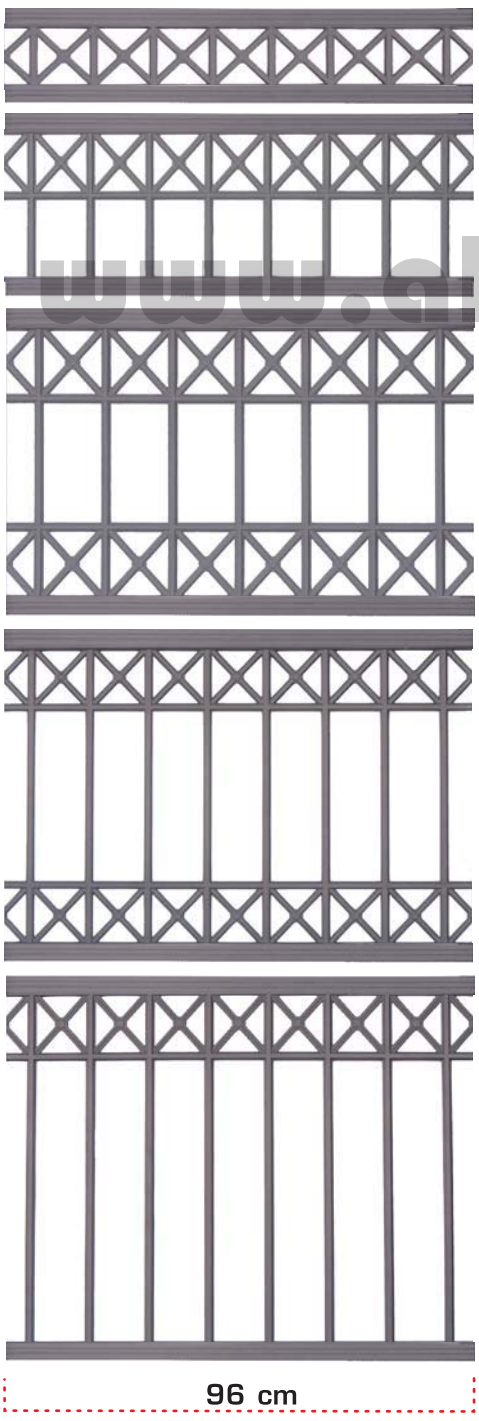

19 cm — 19-02 — ETHNIKIS
5 pcs x 96 cm = 480 cm

35 cm — 35-06 — NEOKLASSIKO B
5 pcs x 96 cm = 480 cm

55 cm — 55-03 — ETHNIKIS A
5 pcs x 96 cm = 480 cm

70 cm — 70-11 — ETHNIKIS
5 pcs x 96 cm = 480 cm

80 cm — 80-01 — NEOKLASSIKO
5 pcs x 96 cm = 480 cm

www.alumincobg.com

ethnikis

makriyianni

Rail height
30 - 110 cm

psatha modules

19-06 MAKRIYIANNI
5 pcs x 96 cm = 480 cm

35-03 MAKRIYIANNI B
5 pcs x 96 cm = 480 cm

www.aluminco.bg.com

55-05 MAKRIYIANNI A
5 pcs x 96 cm = 480 cm

70-13 MAKRIYIANNI
5 pcs x 96 cm = 480 cm

80-23 5 pcs x 96 cm = 480 cm

aluminco psatha railing system

Rail height
30 - 100 cm

psatha modules

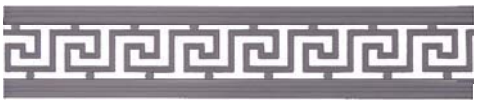

18 cm

MEANDROS
18-01 5 pcs x 96 cm = 480 cm

35 cm

ATHENIAN B
35-05 5 pcs x 96 cm = 480 cm

www.aluminco.bg.com

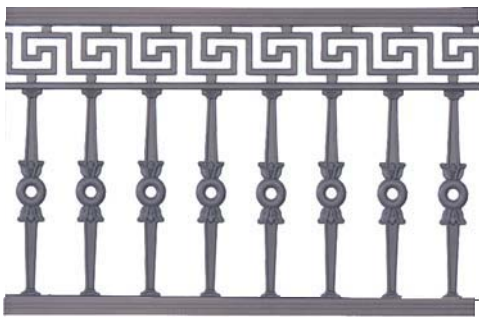

55 cm

ATHENIAN A
55-08 5 pcs x 96 cm = 480 cm

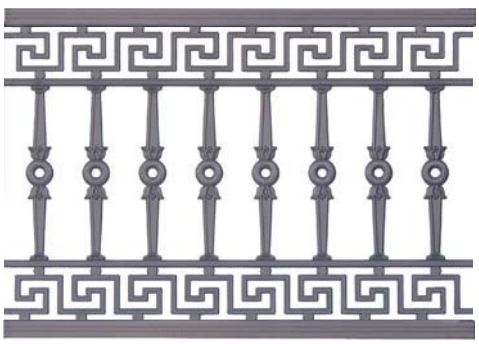

70 cm

ATHENIAN
70-25 5 pcs x 96 cm = 480 cm

96 cm

garland

Rail height
30 - 100 cm

psatha modules

15 cm

KIMATAKI
15-03 5 pcs x 96 cm = 480 cm

35 cm

GARLAND
35-07 5 pcs x 96 cm = 480 cm

www.aluminco.bg.com

55 cm

GARLAND A
55-07 5 pcs x 96 cm = 480 cm

70 cm

GARLAND
70-26 5 pcs x 96 cm = 480 cm

96 cm

aluminco psatha railing system

Rail height
30 - 100 cm

psatha modules

16 cm

16-04

KAMARA
5 pcs x 96 cm = 480 cm

35 cm

35-01

KAMARA B
5 pcs x 96 cm = 480 cm

www.aluminco-bg.com

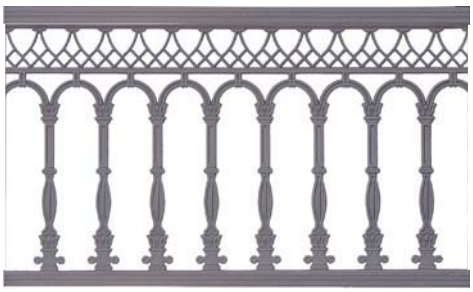

55 cm

55-02

KAMARA A
5 pcs x 96 cm = 480 cm

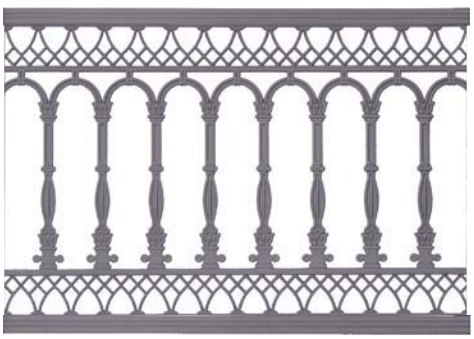

96 cm

70 cm

70-12

KAMARA
5 pcs x 96 cm = 480 cm

kamara

Rail height
45 - 110 cm

psatha modules

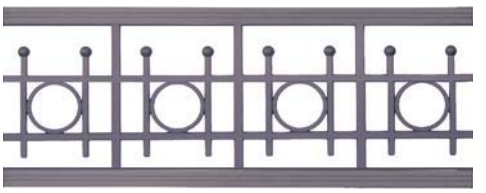

35-17 5 pcs x 96 cm = 480 cm

55-18 5 pcs x 96 cm = 480 cm

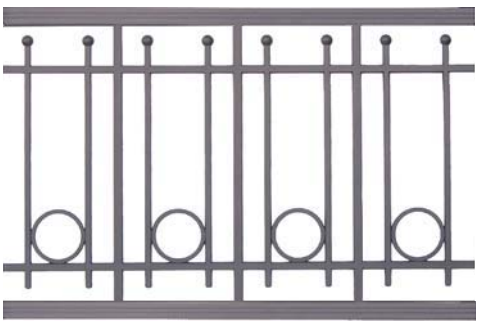

70-33 5 pcs x 96 cm = 480 cm

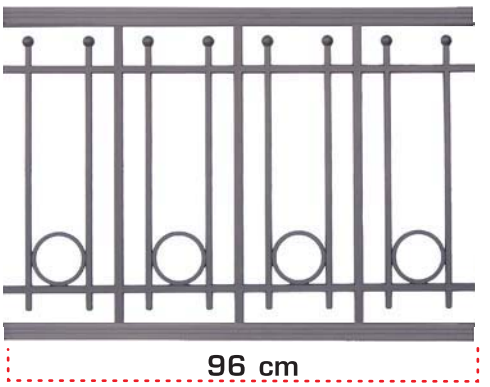

80-22 5 pcs x 96 cm = 480 cm

www.aluminco.bg.com

Rail height
45 - 110 cm

psatha modules

35 cm

35-02

VIENNA B
5 pcs x 96 cm = 480 cm

55 cm

55-01

VIENNA A
5 pcs x 96 cm = 480 cm

www.alumincobg.com

70 cm

70-24

VIENNA
5 pcs x 96 cm = 480 cm

80 cm

80-24

5 pcs x 96 cm = 480 cm

96 cm

vienna

KOSSOS

Rail height
45 - 110 cm

psatha modules

35 cm

35-09 5 pcs x 96 cm = 480 cm

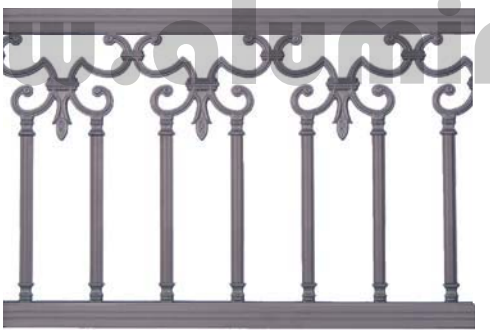

50 cm

50-01 5 pcs x 96 cm = 480 cm

70 cm

70-29 5 pcs x 96 cm = 480 cm

80 cm

80-07 5 pcs x 96 cm = 480 cm

96 cm

www.aluminco-bg.com

aluminco psatha railing system

Rail height
60 - 110 cm

psatha modules

50 cm

50-02 5 pcs x 96 cm = 480 cm

www.alumincobg.com

70 cm

70-30 5 pcs x 96 cm = 480 cm

80 cm

80-08 5 pcs x 96 cm = 480 cm

96 cm

festos

KNOSSOS B

Rail height
90 - 110 cm

psatha modules

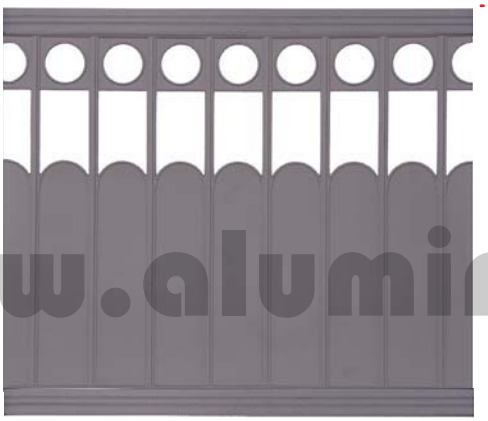

80 cm

KYTHNOS

80-17 5 pcs x 96 cm = 480 cm

www.alumicobg.com

70 cm

70-31 5 pcs x 96 cm = 480 cm

80 cm

80-09 5 pcs x 96 cm = 480 cm

96 cm

aluminco psatha railing system

Rail height
90 - 110 cm

psatha modules

80 cm

80-05 5 pcs x 96 cm = 480 cm

www.alumincobg.com

80 cm

80-03 LINEAR
5 pcs x 96 cm = 480 cm

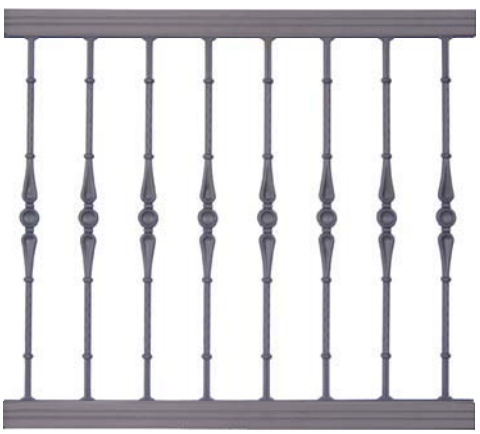

80 cm

96 cm

80-11 MINOAN A
5 pcs x 96 cm = 480 cm

colonial

alumco

Rail height
45 - 110 cm

psatha modules

35 cm

35-15 5 pcs x 96 cm = 480 cm

55 cm

55-15 5 pcs x 96 cm = 480 cm

70 cm

70-37 5 pcs x 96 cm = 480 cm

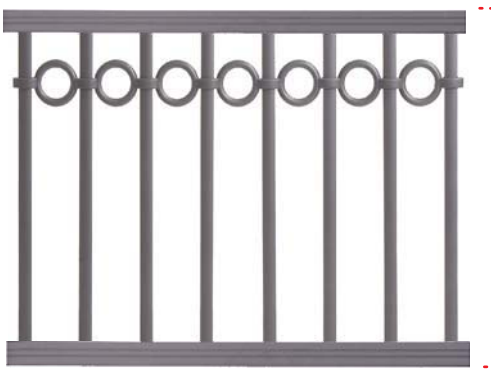

80 cm

80-19 5 pcs x 96 cm = 480 cm

96 cm

www.aluminco.bg.com

aluminco psatha railing system

Rail height
45 - 110 cm

psatha modules

35 cm

35-08 5 pcs x 96 cm = 480 cm

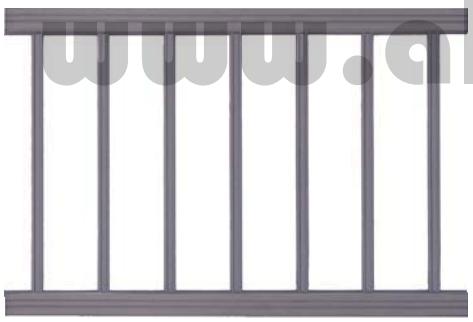

55 cm

55-09 5 pcs x 96 cm = 480 cm

70 cm

70-28 5 pcs x 96 cm = 480 cm

80 cm

80-06 5 pcs x 96 cm = 480 cm

96 cm

www.alumincobg.com

alumnco psatha railing system

asteri A

Rail height
45 - 110 cm

psatha modules

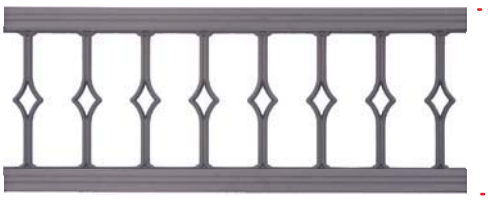

35 cm | 35-14 | 5 pcs x 96 cm = 480 cm

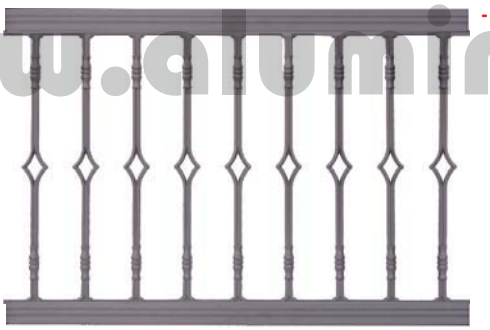

55 cm | 55-17 | 5 pcs x 96 cm = 480 cm

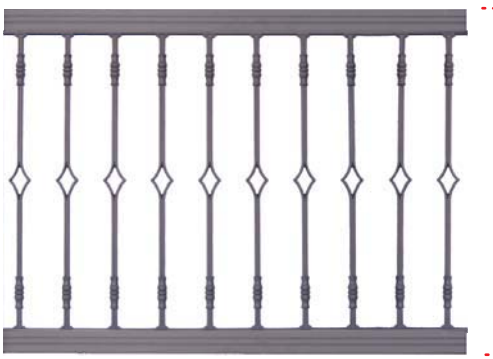

70 cm | 70-36 | 5 pcs x 96 cm = 480 cm

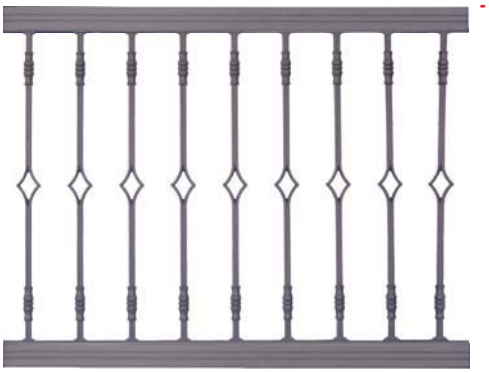

80 cm | 80-18 | 5 pcs x 96 cm = 480 cm

96 cm

www.alumincobg.com

aluminco psatha railing system

Rail height
45 - 110 cm

psatha modules

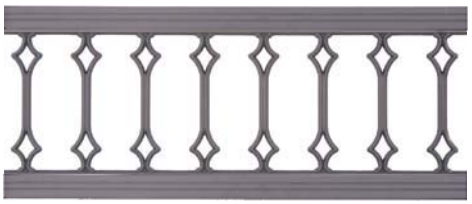

35 cm

35-16 5 pcs x 96 cm = 480 cm

55 cm

55-16 5 pcs x 96 cm = 480 cm

70 cm

70-34 5 pcs x 96 cm = 480 cm

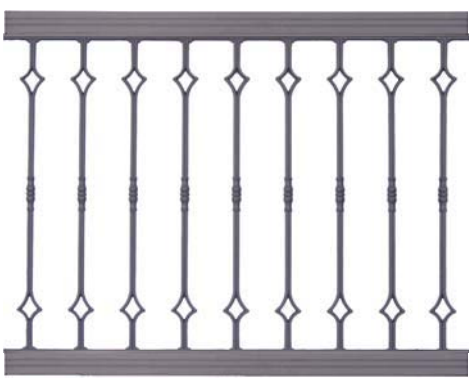

80 cm

80-10 5 pcs x 96 cm = 480 cm

96 cm

www.aluminco.com

geometric

Rail height
90 - 110 cm

psatha modules

80 cm

EFESSOS

80-14 5 pcs x 96 cm = 480 cm

www.alumincobg.com

80 cm

100 cm

AMFOREAS

80-15 5 pcs x 100 cm = 500 cm

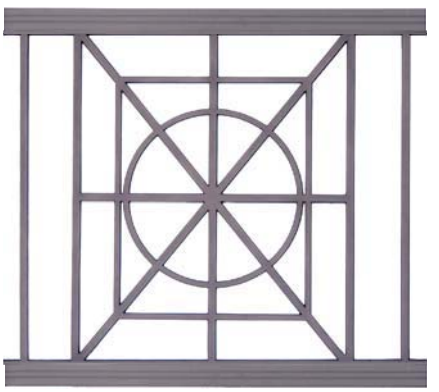

80 cm

96 cm

GEOMETRIC

80-21 5 pcs x 96 cm = 480 cm

Rail height
45 - 80 cm

psatha modules

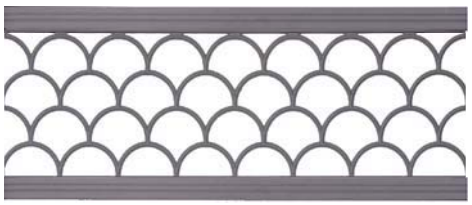

35 cm

35-12 5 pcs x 96 cm = 480 cm

www.aluminco.bg.com

VEDALIA

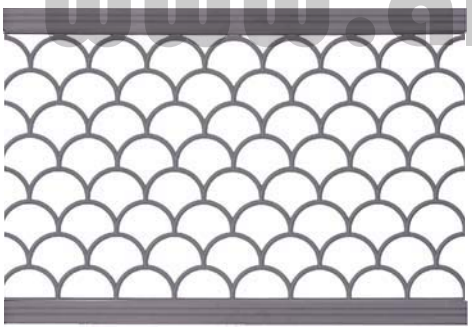

55 cm

55-12 5 pcs x 96 cm = 480 cm

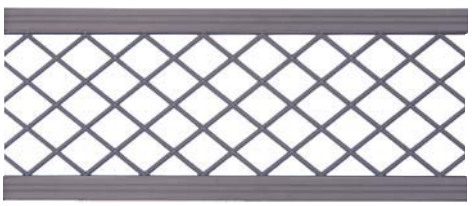

35 cm

35-11 5 pcs x 96 cm = 480 cm

CHIASTI

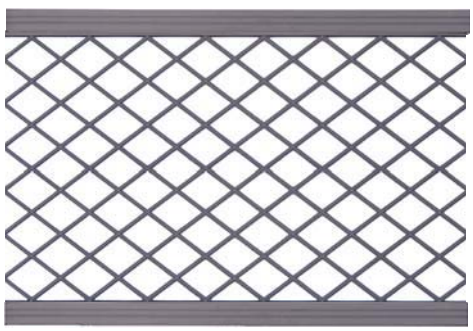

50 cm

55-14 5 pcs x 96 cm = 480 cm

96 cm

kolonato

Rail height
35 - 100 cm

psatha modules

16 cm

14-05

CHIASTI
5 pcs x 96 cm = 480 cm

35 cm

35-04

KOLONATO B
5 pcs x 96 cm = 480 cm

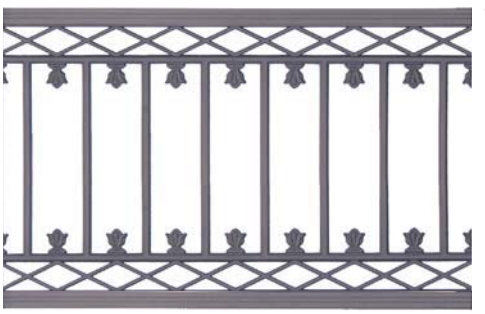

55 cm

55-04

KOLONATO A
5 pcs x 96 cm = 480 cm

70 cm

96 cm

70-01

KOLONATO
5 pcs x 96 cm = 480 cm
Combined with: 70-05
70-06
70-07

www.alumineobg.com

aluminco psatha railing system

Rail height
80 - 100 cm

psatha modules

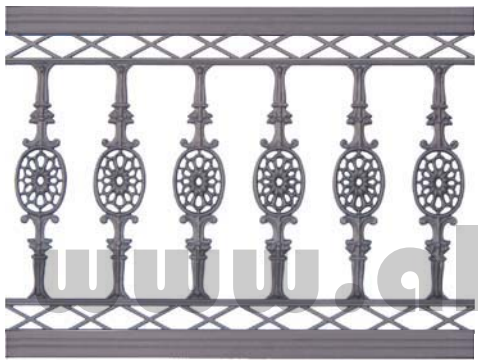

70-02

ROCKA

5 pcs x 96 cm = 480 cm
Combined with: 70-05
70-06
70-07

www.alumincobg.com

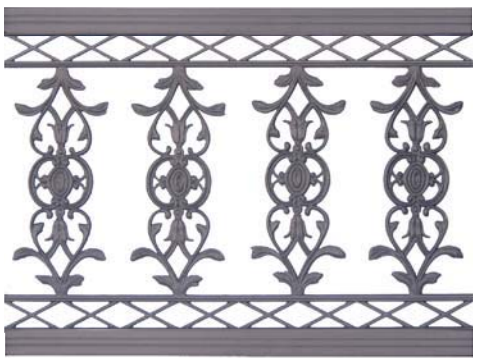

70-03

KRINOS

5 pcs x 96 cm = 480 cm
Combined with: 70-05
70-06
70-07

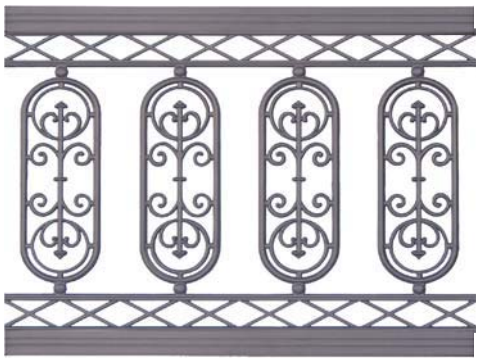

70-04

KORONA WITH RHOMBUS

5 pcs x 96 cm = 480 cm
Combined with: 70-05
70-06
70-07

KORONA

byzantine with rhombus

Rail height
80 - 100 cm

psatha modules

HERON 70-05
2 pcs x 108 cm = 216 cm
Combined with: 70-01, 70-02, 70-03, 70-04

DRAGON 70-06
Combined with: 70-01, 70-02, 70-03, 70-04

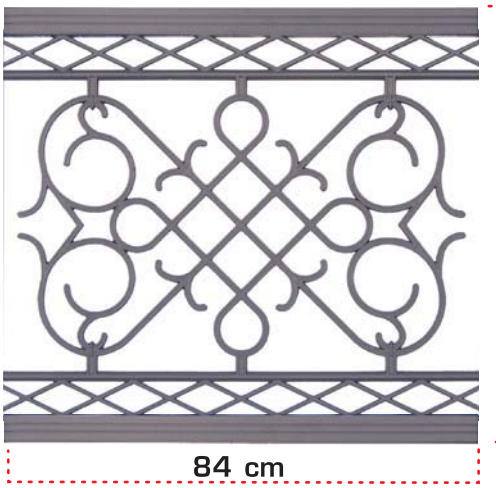

70-07
Combined with: 70-01, 70-02, 70-03, 70-04

www.alumicobg.com

Rail height
30 - 100 cm

psatha modules

17-07

ROZETTE
5 pcs x 84 cm = 420 cm

www.alumincobg.com

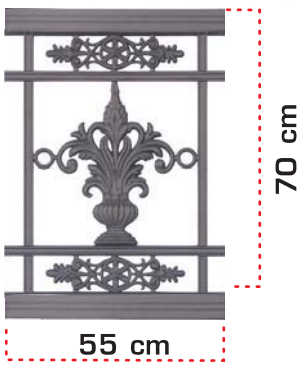

70-21

FLOWER POT
9 pcs x 55 cm = 495 cm
Combined with: 70-10
70-20

70-20

2 pcs x 108 cm = 216 cm
Combined with: 70-21
70-10

gothic

Rail height
30 - 110 cm

psatha modules

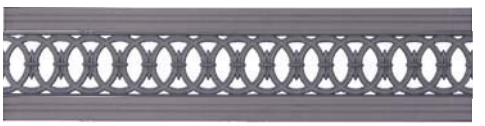

19 cm

19-09 5 pcs x 96 cm = 480 cm
Combined with: 80-04
70-38

70 cm

70-38 5 pcs x 96 cm = 480 cm

www.alumincobg.com

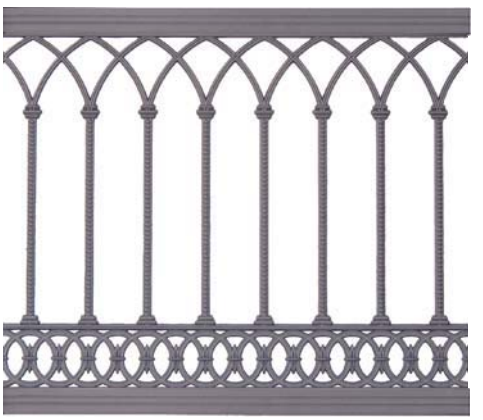

80 cm

80-04

70 cm

LINEAR

70-10 5 pcs x 96 cm = 480 cm
Combined with: 70-16 70-20
70-17 70-21
70-18 70-22
70-19 70-23

96 cm

Rail height
50 - 100 cm

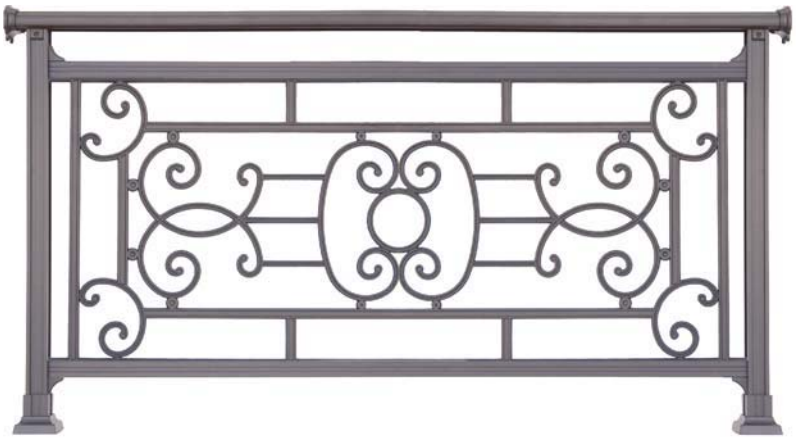

psatha modules

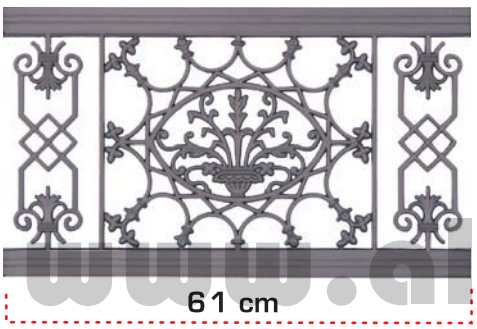

35-10 ANTHODESMI

www.alumincobg.com

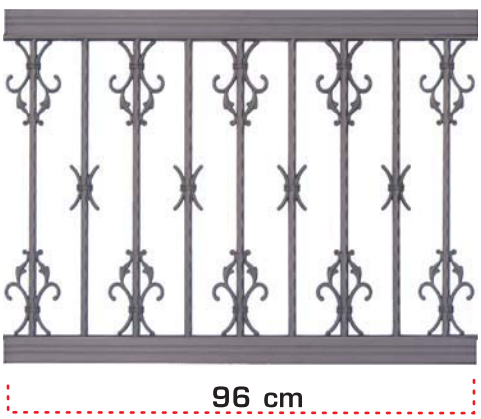

70-14 DOLPHIN
5 pcs x 96 cm = 480 cm

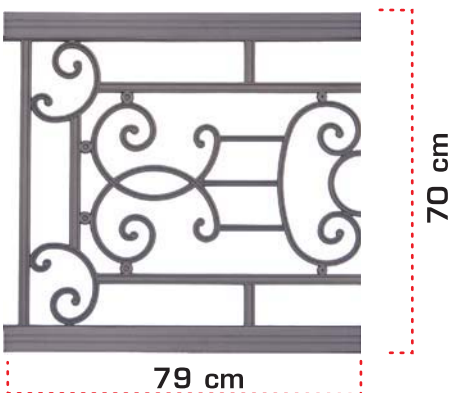

70-32 6 pcs x 79 cm = 474 cm
Combined with: 70-10

linear

Rail height
60 - 80 cm

psatha modules

1075 5 pcs x 96 cm = 480 cm
Combined with: 55-06

www.alumincobg.com

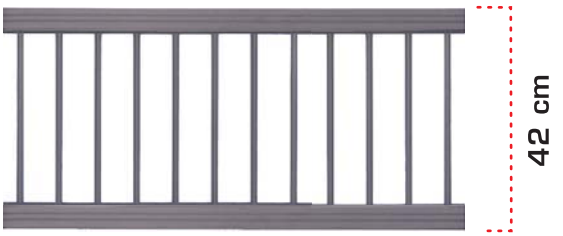

42-02 5 pcs x 84 cm = 420 cm
Combined with: 42-01

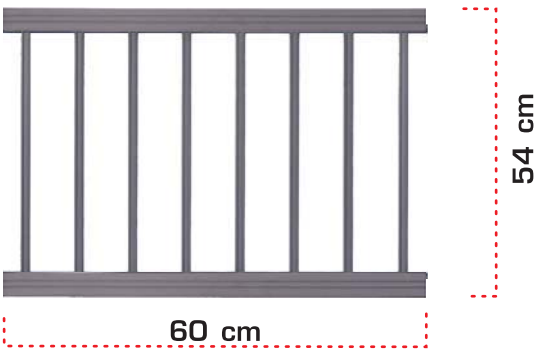

55-11 8 pcs x 60 cm = 480 cm
Combined with: 55-10

Rail height
80 - 110 cm

psatha modules

KARAVOLO WITH SAITA

70-27 5 pcs x 88 cm = 440 cm

www.alumincobg.com

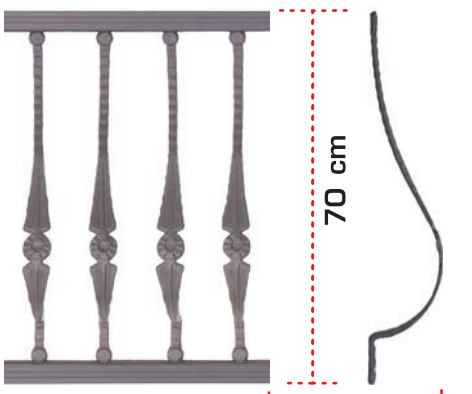

70-15

VENITIAN

10 pcs x 47 cm = 470 cm

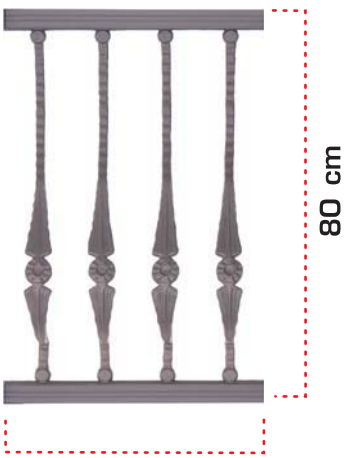

80-25

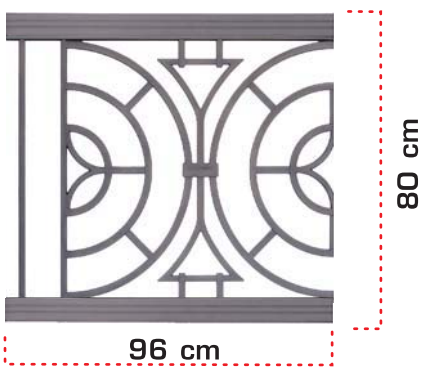

80-20 5 pcs x 96 cm = 480 cm

classic

Rail height
80 - 100 cm

psatha modules

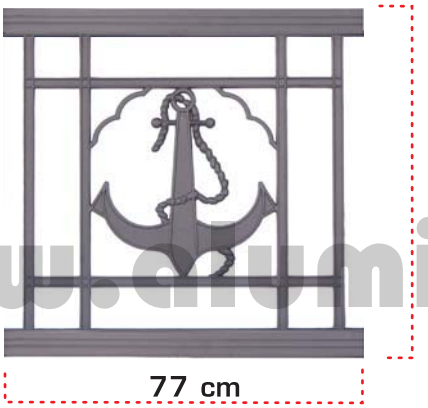

ANCHOR

70-18 6 pcs x 77 cm = 462 cm
Combined with: 70-10
70-16
70-17
70-19

www.alumincobg.com

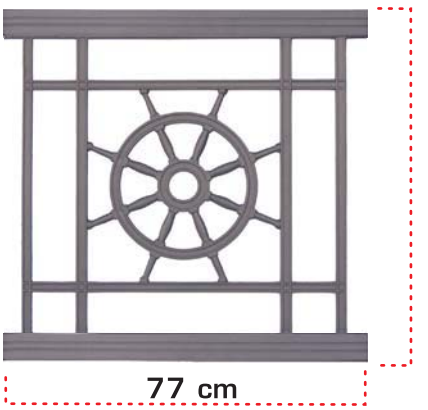

WHEEL

70-19 6 pcs x 77 cm = 462 cm
Combined with: 70-10
70-16
70-17
70-18

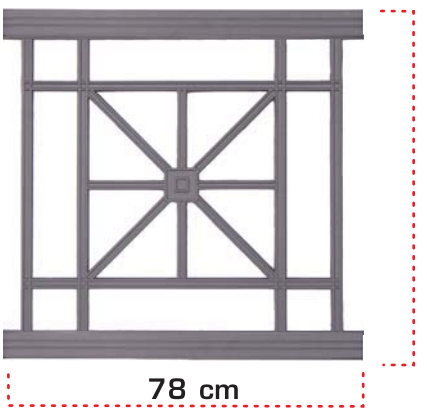

70-16 6 pcs x 78 cm = 468 cm
Combined with: 70-10
70-18
70-19

Rail height
50 - 100 cm

psatha modules

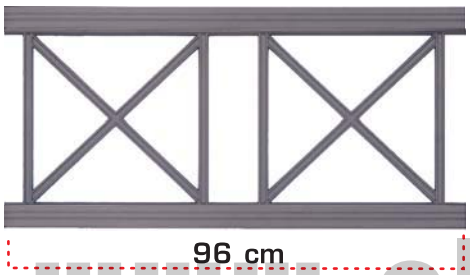

CLASSIC

42-01 — 5 pcs x 96 cm = 480 cm
Combined with: 42-02

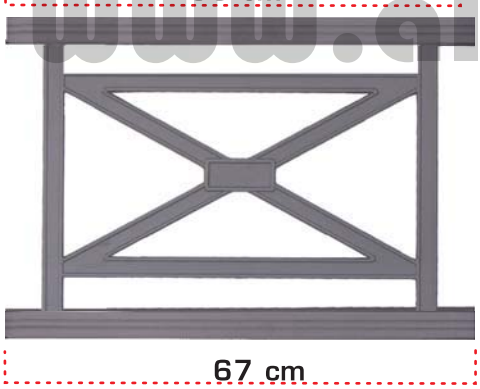

CHRIMATISTIRION

55-06 — 7 pcs x 67 cm = 480 cm
Combined with: 1075

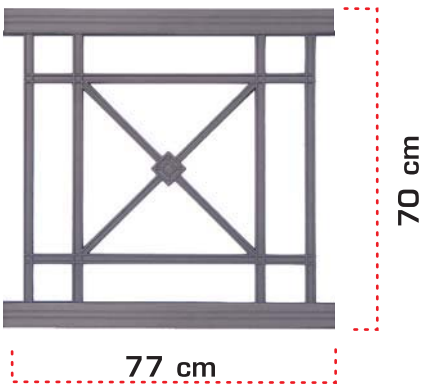

DORIC

70-17 — 6 pcs x 77 cm = 462 cm
Combined with: 70-10
70-18
70-19

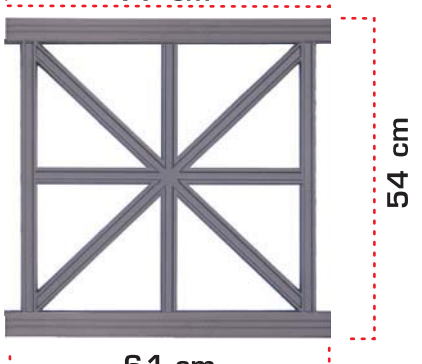

55-10 — 8 pcs x 61 cm = 488 cm
Combined with: 55-11

www.alumincobg.com

alumico psatha railing system

byzantine

Rail height
80 - 110 cm

psatha modules

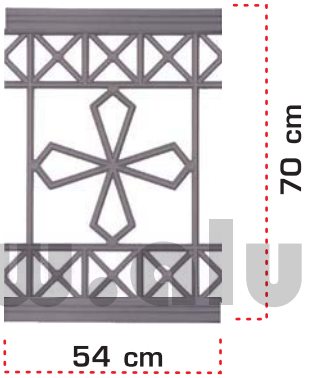

CROSS

70-22 9 pcs x 54 cm = 486 cm
Combined with: 70-11

www.alumincobg.com

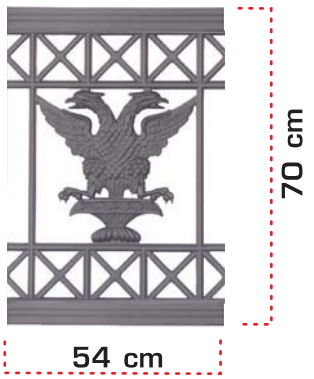

DIKEPHALOS

70-23 9 pcs x 54 cm = 486 cm
Combined with: 70-11

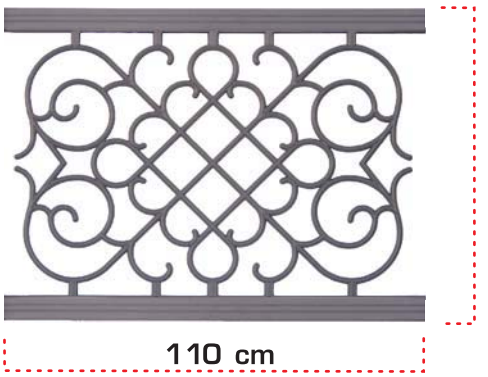

80-02 Combined with: 80-03

5 pcs x 76 cm = 380 cm

239

- DORY -

5 pcs x 96 cm = 480 cm

19-10

- AKRO LONGHIS -

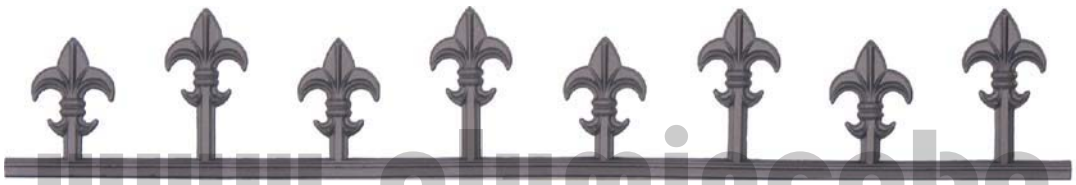

www.aluminecobg.com

5 pcs x 96 cm = 480 cm

16-11

- SPATHA -

5 pcs x 96 cm = 480 cm

16-12

- KAMBANA -

5 pcs x 96 cm = 480 cm

13-13

- LONGHI -

6,3 cm

42

1,6 cm

45

9 cm

240

3,5 cm

267

3,5 cm

268

aluminco fencing combinations

code
4402

Cover of column No 915

code
4210

Column connection for external fence

code
4209

Column connection for external psatha

psatha fencing combinations

FENCE HEIGHT FROM 30cm UP TO 120cm

www.aluminco-bg.com

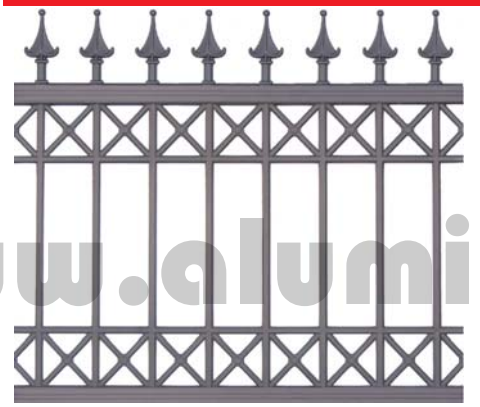

19-10 + 70-11

16-12 + 70-24

16-11 + 70-13

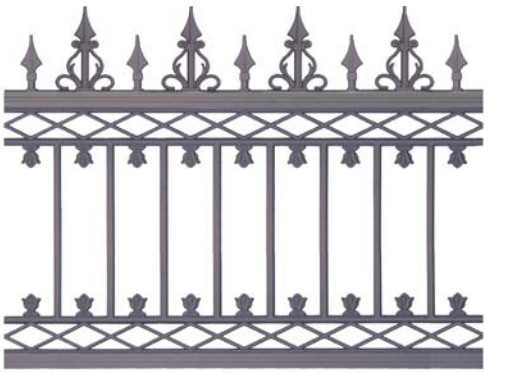

16-12 + 55-04

16-12 + 70-14 + 13-13

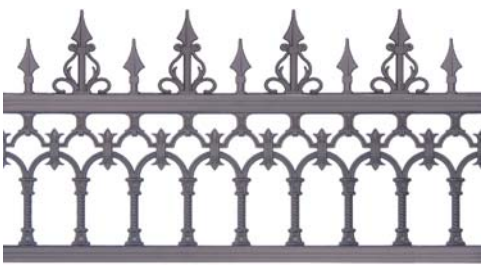

16-12 + 35-02

aluminco fencing combinations

code 271

Horizontal guide attachment for 896

code 269

Guide Attachment 896

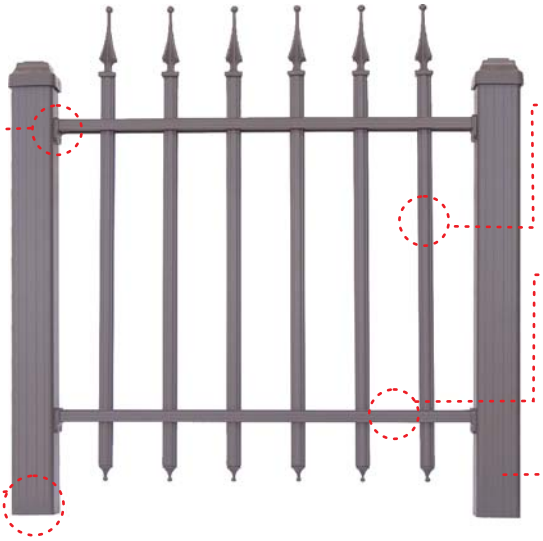

code 5-006

Railway Column Φ28

code 896

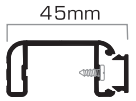

Railway Guide

code 270

Cover guide for 896

code 4102

Supporting foot for colomn **25**

code 25

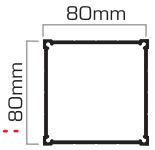

Column

psatha fencing combinations

FENCE HEIGHT FROM 30cm UP TO 200cm

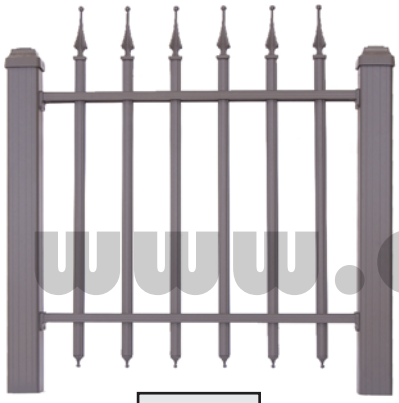

90-05

90-02

www.aluminco-bg.com

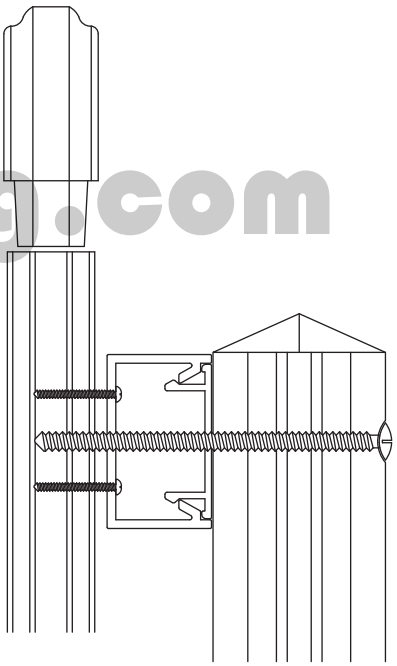

Connection with column-horizontal guide

90-04

90-03

code 823

Clipped Guide

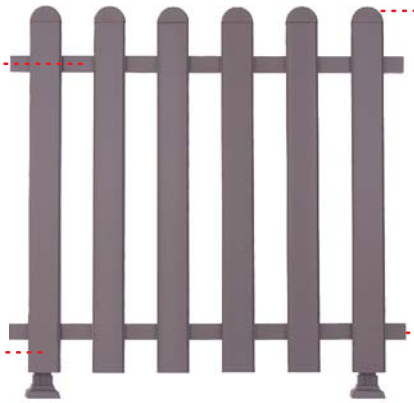

code 203

Cover

code 822

Fence Profile

code 4504

Cover for guide **823**

89-01

ways to measure & install rails - gates

ways to measure

GROUND PLAN

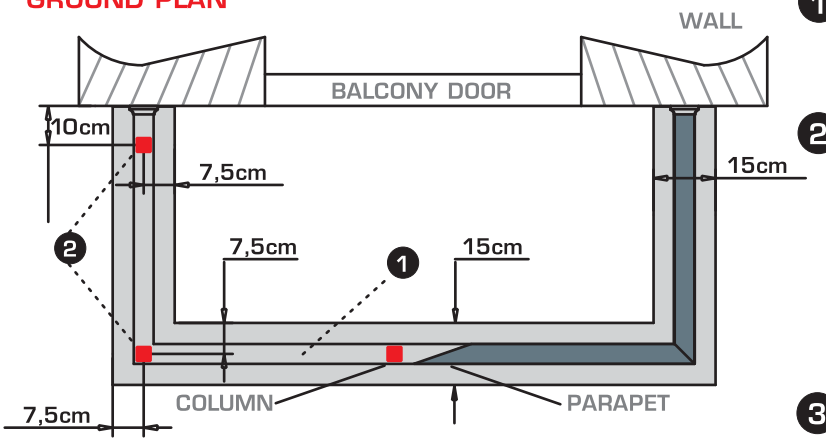

1. The rail is installed in the center of the balcony parapet.
2. The measurements are taken from the wall to the centre of the column and afterwards to the center of the next column.
3. The distance between the wall and the external side of the column must be 8cm.

FRONT VIEW

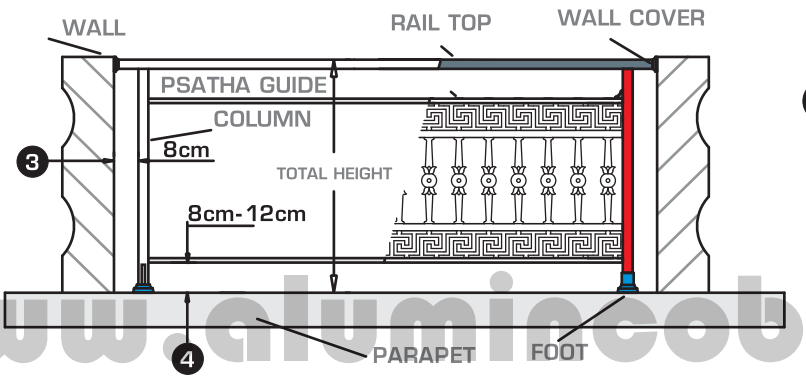

4. The space between the ground and the bottom of the guide must be:
-minimum 8cm
-(if we are using a supporting foot)
-maximum 12cm.

www.aluminecobg.com

FRONT VIEW

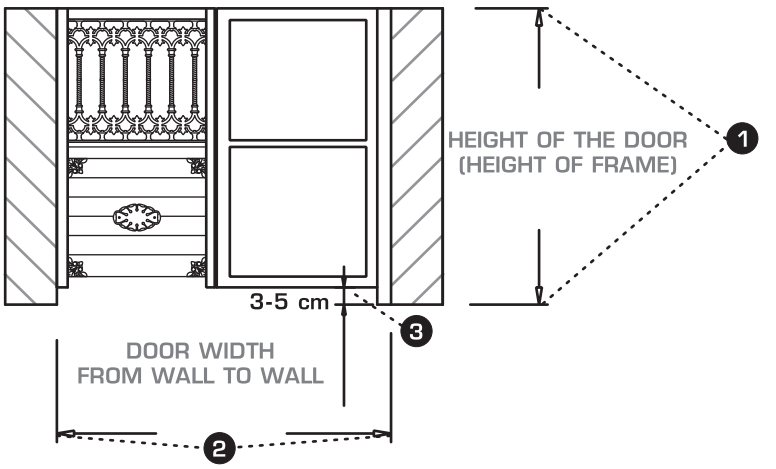

NECESSARY INFORMATION REQUIRED FOR GATES

- Opening gate - Sliding gate.
- Single - Double.
- Opening direction of the gate when looking on from the outside To the left To the right.

1. The height o the gate is measured from the ground to the top part of the frame.
2. The width is measured from wall to wall.
3. The space between the ground and the bottom part of the gate should be between 3cm to 5cm.

RAILTOP COLUMN SUPPORTING FOOT
PARAPET WALL PSATHA GUIDE

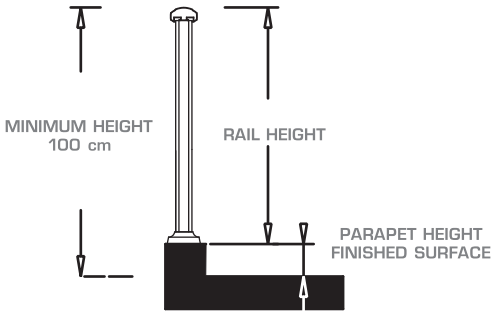

PARAPET HEIGHT	RAIL HEIGHT
10 cm	90 cm
20 cm	80 cm
30 cm	70 cm
40 cm	60 cm

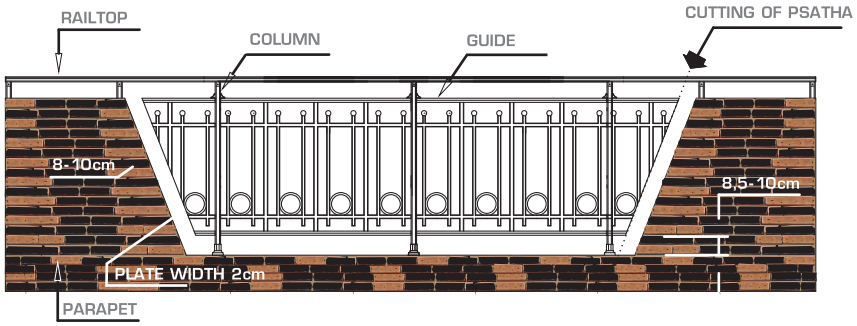

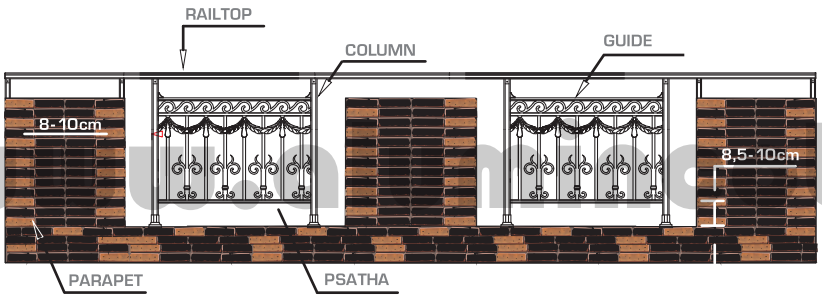

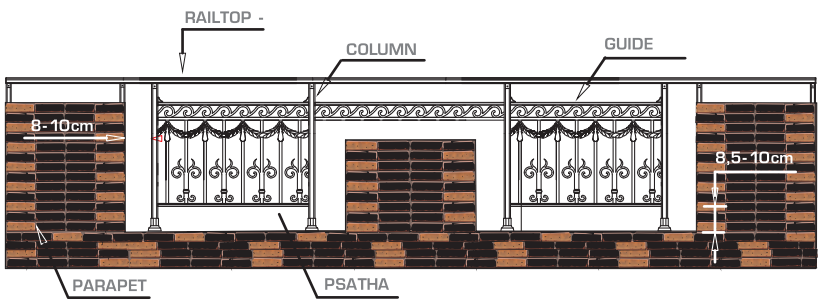

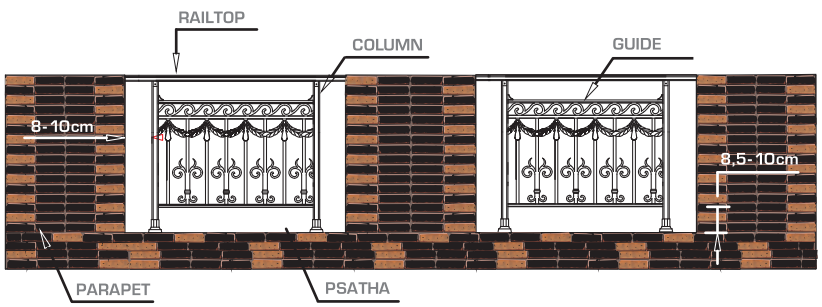

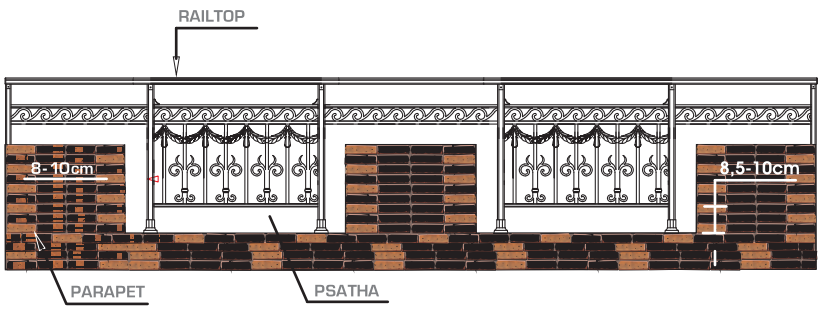

www.mhc.bg.com

ways to measure & install rails - gates

ways to measure

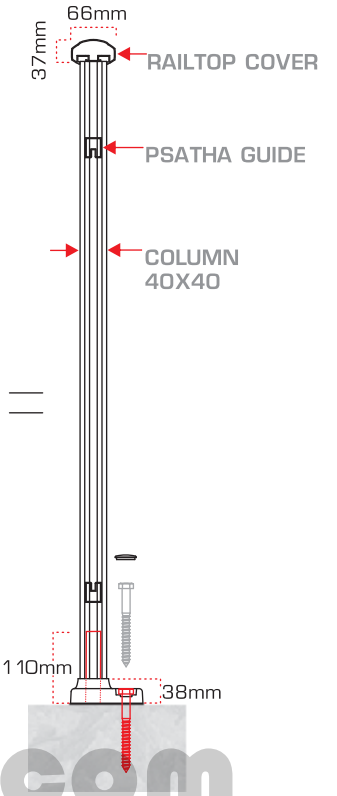

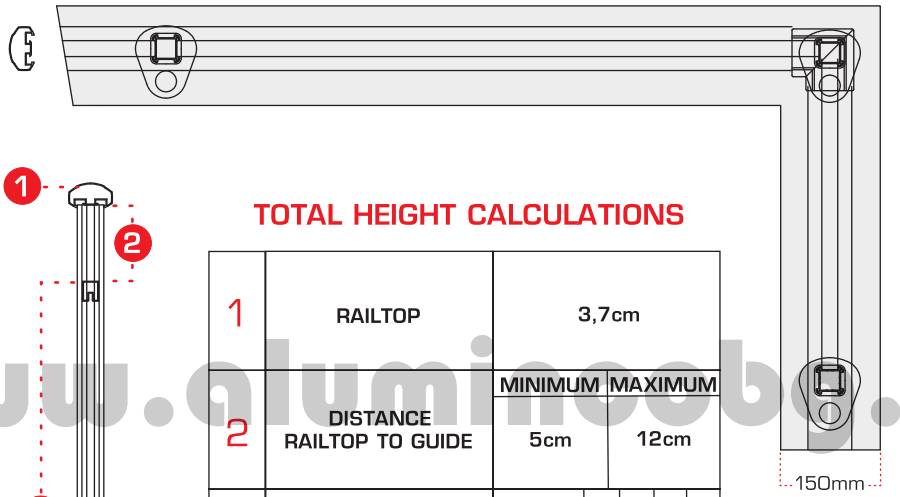

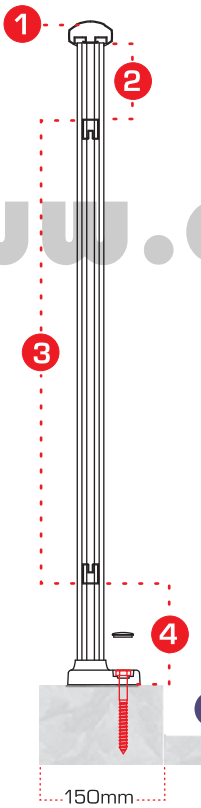

TOTAL HEIGHT CALCULATIONS

1	RAILTOP	3,7cm				
2	DISTANCE RAILTOP TO GUIDE	MINIMUM	MAXIMUM			
		5cm	12cm			
3	PSATHA OR AL-FLEX HEIGHT	AL- FLEX	55	65	75	85
		PSATHA	35	55	70	80
4	DISTANCE GUIDE TO GROUND	MINIMUM	MAXIMUM			
		7cm	10cm			

www.aluminoob.com

A Suggested parapet width 150mm. Installation of supporting base should be in center alignment.

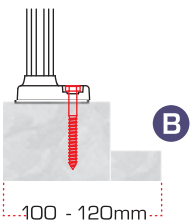

B In case of parapet width 120mm, installation of supporting base should be 10mm from the edge.

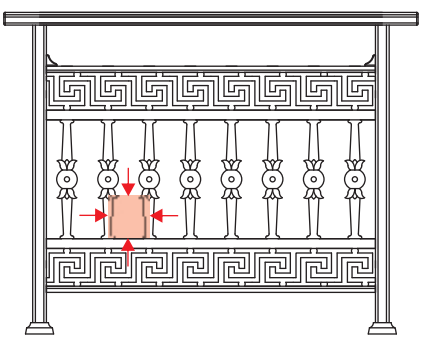

REGULATIONS

According to the international building regulations, there should not be any greater opening than 10X 10cm. Furthermore, there are no horizontal sections in any of the models, which would create a step for a child and thus endanger his safety.
In the case of AVANT GARDE, the bottom horizontal part is 45cm which complies with the safety rules.

END-FINISHING RAILING FOR
COLUMN 80X80 OR SIDE WALL

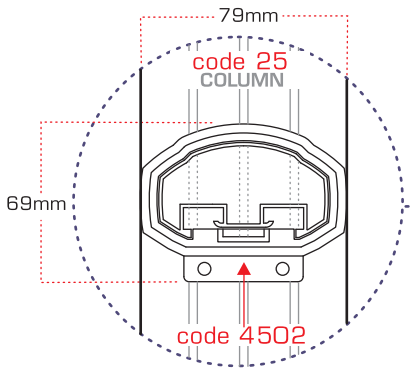

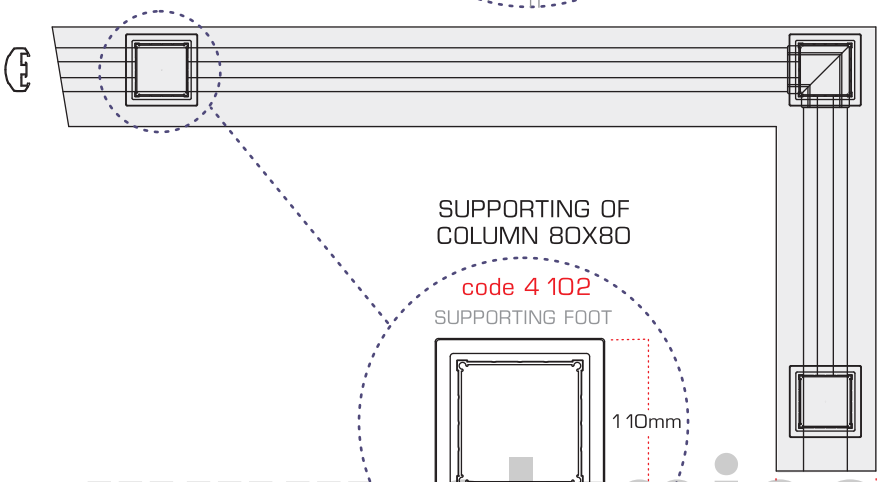

SUPPORTING OF
COLUMN 80X80

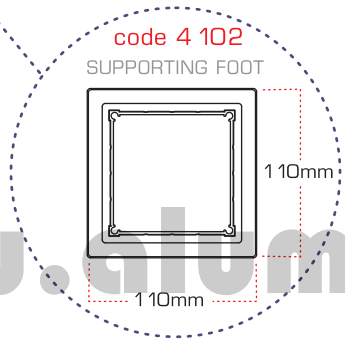

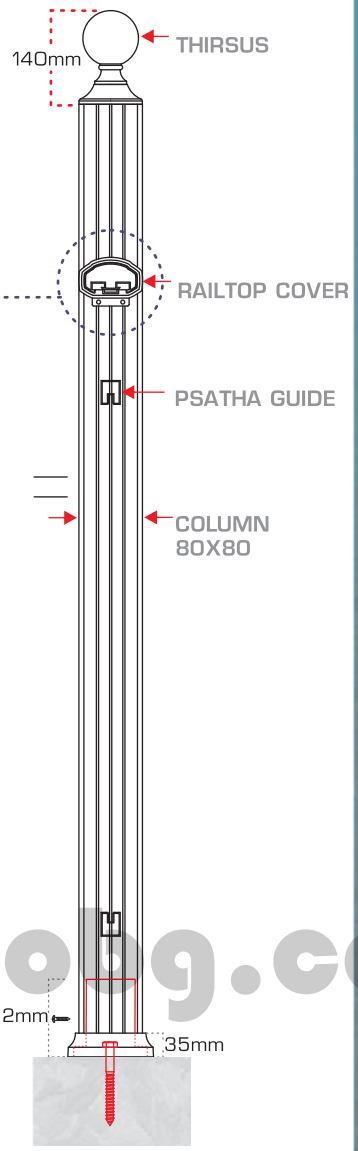

www.aluminco.bg.com

INTERNAL PSATHA

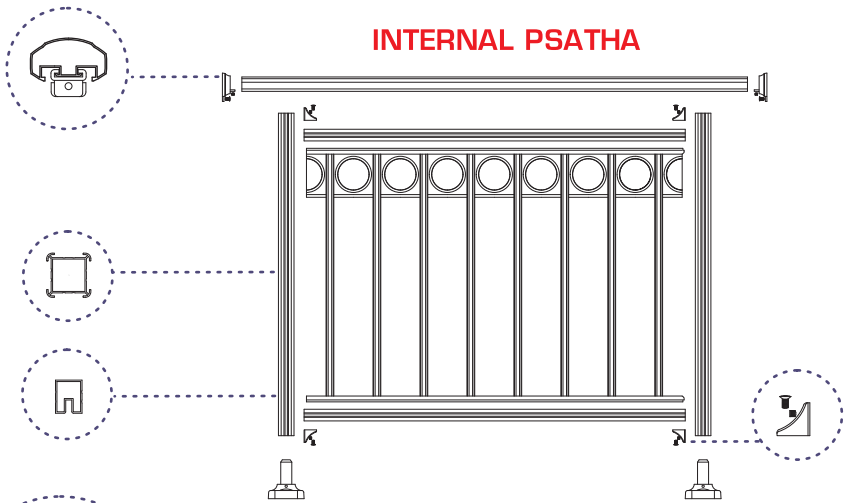

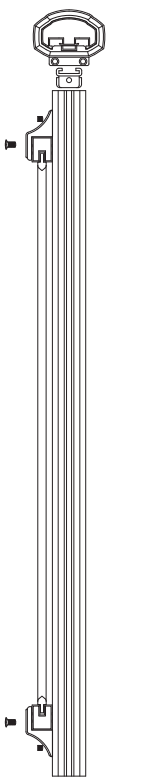

EXTERNAL PSATHA

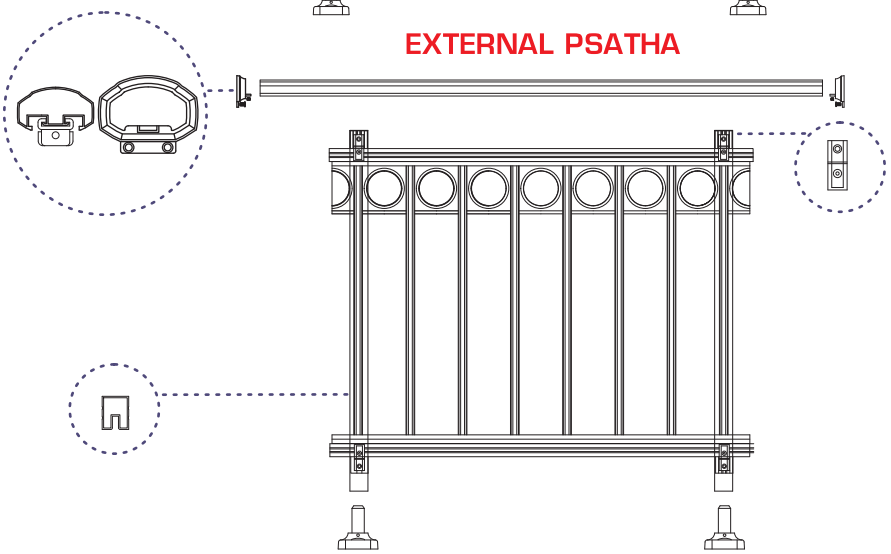

A

code 900

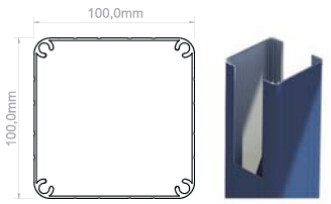

Supporting column

A

code 901

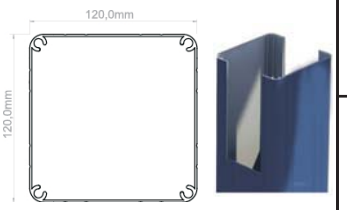

Supporting column

code 99-044

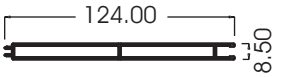

Rabote Profile
790gr/m

code 99-045

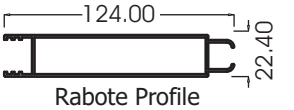

Rabote Profile
1040gr/m

code 29-047

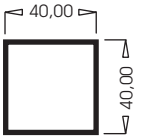

Standard profile
620gr/m

code 40-033

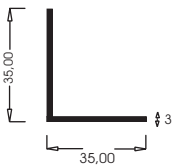

Standard profile
540gr/m

code 49-016

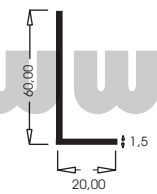

Standard profile
320gr/m

code 949 Top

code 950
Bottom

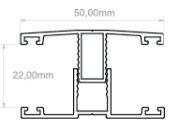

code 948 Top

code 950
Bottom

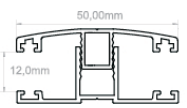

www.pergola.com

G
code 272-200

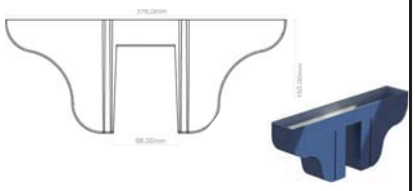

Supporting base for column

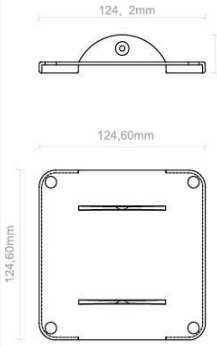

F
code 272-230

Cover for column 901

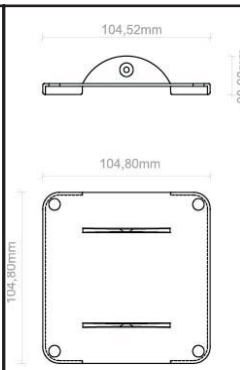

F
code 272-231

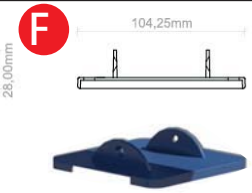

Cover for column 900

C
code 59-026

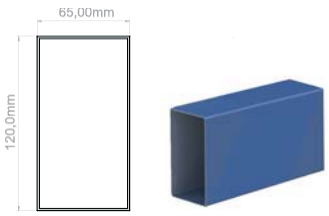

Standard profile

B
code 59-027

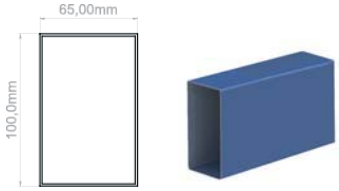

Standard profile

B
code 59-028

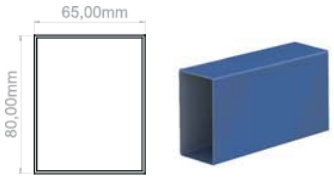

Standard profile

code 4104

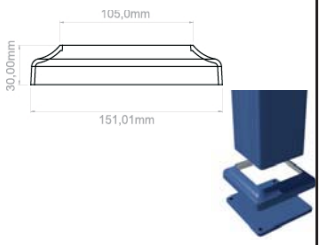

Supporting column for 900

E
code 272-212

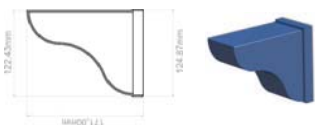

End finishing for column 59-026

Glazing 8-12 mm.
Supporting system

D
code 272-211

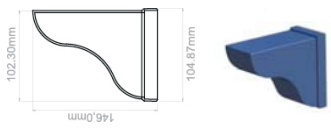

End finishing for column 59-027

Glazing 14-22 mm.
Supporting system

D
code 272-210

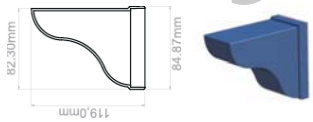

End finishing for column 59-028

code 4105

Supporting column for 901

www.alumicoog.com

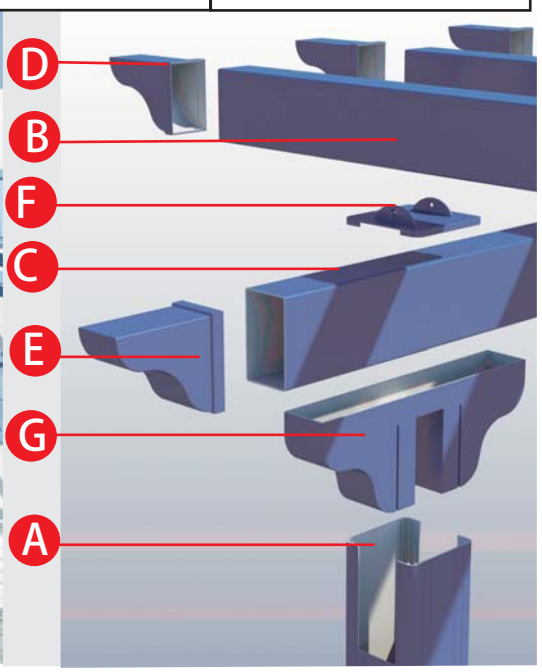

TÜV AUSTRIA HELLAS
EN ISO 9001:2008
No. : 01010151

TÜV AUSTRIA HELLAS
EN ISO 14001:2004
No. : 04010023

SEA-SIDE CLASS
QUALICOAT
Assurance of Quality for Aluminium Powder Coating

ISTITUTO GIORDANO

www.alumincobg.com

АЛУМИНКО-БГ

АЛУМИНИЕВИ СИСТЕМИ

8000 Бургас, ул. „Индустриална” № 47
Тел.: 056 / 844 712
Факс: 056 / 845 309
0885 325 902